(19) Europäisches Patentamt
European Patent Office
Office européen des brevets

(11) EP 2 891 860 B1

(12) **EUROPEAN PATENT SPECIFICATION**

(45) Date of publication and mention of the grant of the patent:
28.03.2018 Bulletin 2018/13

(21) Application number: **15150260.6**

(22) Date of filing: **07.01.2015**

(51) Int Cl.:
F27D 1/18 (2006.01)
F27D 9/00 (2006.01)
C21D 9/00 (2006.01)
F27D 3/02 (2006.01)
F27B 17/00 (2006.01)
F27D 3/00 (2006.01)

(54) **Mobile removable hearth skid for furnace arrangement and assembly**

Mobiler abnehmbarer Gleit-Herd für Ofen gestalltung und Zusammenbau

Sole mobile glissante pour un arrangement de four et son assemblage

(84) Designated Contracting States:
AL AT BE BG CH CY CZ DE DK EE ES FI FR GB GR HR HU IE IS IT LI LT LU LV MC MK MT NL NO PL PT RO RS SE SI SK SM TR

(30) Priority: **07.01.2014 US 201461924338 P**
11.04.2014 US 201414251085

(43) Date of publication of application:
08.07.2015 Bulletin 2015/28

(73) Proprietor: **Can-Eng Partners Limited**
Niagara Falls, Ontario L2E 6V5 (CA)

(72) Inventors:
- **Van Geyn, Alan**
Haliburton, Ontario, K0M 1S0 (CA)
- **Saliba, Joseph Jason**
Fort Erie, Ontario, L2A 5T1 (CA)

(74) Representative: **Reichert & Lindner**
Partnerschaft Patentanwälte
Bismarckplatz 8
93047 Regensburg (DE)

(56) References cited:
EP-A1- 1 146 306
DE-A1- 2 512 485
FR-A1- 2 323 969
US-A- 3 476 368

EP 2 891 860 B1

Printed by Jouve, 75001 PARIS (FR)

Description

FIELD OF THE INVENTION

[0001] The present disclosure relates to the field of metal castings, specifically to furnaces used to heat treat metal castings, and more specifically, to the movement of metal castings into and out of furnaces.

BACKGROUND OF THE INVENTION

[0002] Metal castings are heat treated to allow the components of the casting to diffuse uniformly throughout the casting. The length of time for heat treatment is dependent on the size and shape of the casting, the metal(s) and other additives included in the casting, and as well as other factors. For this reason, facilities with many furnaces will operate them for different heat-treating time periods. Often, castings are transported by rail to and from the furnace, for example by mobile removable hearth skids with integrated wheels according to FR 2 323 969 A1, EP 1 146 306 A1, DE 25 12 485 A1, and US 3,476,368 A. Because of the inflexibility of railroad tracks, it can be difficult to schedule and move castings into and out of furnaces, especially when heat treating times can vary. In addition, it becomes difficult to utilize furnaces to full capacity over time when heat treating times vary for different castings.

SUMMARY OF THE INVENTION

[0003] According to aspects described and illustrated herein there is provided a base, the base including a top horizontal surface with a base perimeter edge and at least two supports extending from said top horizontal surface; and, a refractory platform supported by the top horizontal surface and having a refractory perimeter edge including a front perimeter edge, a rear perimeter edge, and at least two side perimeter edges. The rear perimeter edge and the at least two side perimeter edges form a continuous shoulder extending beyond the base perimeter edge, the shoulder having a shoulder horizontal surface and a shoulder vertical surface.

[0004] According to aspects described and illustrated herein there is provided a furnace and/or cooling chamber comprising: an enclosure having footings, a top, a rear wall, at least two side walls, and a door opposing the rear wall. Each of the top, rear wall, at least two side walls, and the door include an inner surface with a refractory lining mounted on each of the top inner surface, rear inner surface, at least two side wall inner surfaces, and the door inner surface. A ledge is positioned at the bottom edges of the refractory linings mounted on the rear wall and the at least two side walls, such that a gap is formed between the bottom surface of the ledge on each of said refractory linings and a floor or supporting surface by the furnace supports. The furnace also includes a mobile hearth skid that includes: a base, the base including a top horizontal surface with a base perimeter edge and at least two supports extending from the top horizontal surface and a refractory surface supported by the top horizontal surface and having a refractory perimeter edge. The refractory perimeter edge forms a shoulder extending beyond the base perimeter edge. The shoulder contacts the ledge to form a refractory seal. According to one embodiment, the at least one of the refractory surfaces is fabricated at least partly from firebrick.

[0005] According to aspects described and illustrated herein there is provided a removable refractory seal for a furnace comprising: a continuous ledge fabricated from refractory material and positioned proximate a bottom edge of the refractory material lining a rear wall and proximate a bottom edge of at least two side walls of a first furnace, the ledge having a first horizontal surface and a first vertical surface; and, a continuous shoulder formed in a rear edge and at least two side edges of a first mobile refractory platform, the shoulder having a second horizontal surface and a second vertical surface. The second horizontal surface is removably placed in contact with and sealed against said first horizontal surface and said second vertical surface is removably contacted with and sealed against said first vertical surface.

BRIEF DESCRIPTION OF THE SEVERAL VIEWS OF THE DRAWINGS

[0006] The nature and mode of the operation of the present invention will now be more fully described in the following detailed description of the invention taken with the accompanying drawing Figures, in which:

Figure 1 is a front perspective view of the furnace of the present invention with the door open to reveal the mobile hearth skid positioned inside the furnace;
Figure 2 is a second front perspective view of the furnace with the skid removed;
Figure 3 is a front perspective view of the mobile hearth skid;
Figure 4 is a partial front view of the mobile hearth skid showing the position of the perimeter of the base and the shoulder formation of the perimeter edge of the platform;
Figure 5 is a bottom perspective view of the transporter depicting a plurality of rolling means attached to or extending from the bottom surface of the transporter;
Figure 6A is a front view of the transporter positioned between the supports of the mobile hearth skid;
Figure 6B is the same view as Figure 6A showing the rolling means raised or extended so that the mobile hearth skid is lifted raising the base supports off the floor or ground and enabling the transporter to move or transfer the skid;
Figure 7 is a front perspective view of the combination of the furnace, mobile hearth skid, and trans-

porter of the present invention;

Figure 8A is a front view of the skid after it is carried into the furnace and/or cooling chamber with rolling means extended;

Figure 8B is the same front view showing the rolling means retracted to form a refractory seal;

Figures 9A-9E are front perspective views showing a single transporter loading and withdrawing castings supported by a mobile hearth skid from a furnace; and

Figure 10 is top perspective schematic view of an assembly of furnaces being loaded and unloaded by a single transporter.

DETAILED DESCRIPTION OF EMBODIMENTS OF THE INVENTION

[0007] At the outset, it should be appreciated that like drawing numbers on different drawing views identify identical structural elements of the invention. It also should be appreciated that figure proportions and angles are not always to scale in order to clearly portray the attributes of the present invention.

[0008] While the present invention is described with respect to what is presently considered to be the preferred embodiments, it is understood that the invention is not limited to the disclosed embodiments. The present invention is intended to cover various modifications and equivalent arrangements included within the scope of the appended claims.

[0009] Furthermore, it is understood that this invention is not limited to the particular methodology, materials and modifications described and as such may, of course, vary. It is also understood that the terminology used herein is for the purpose of describing particular aspects only, and is not intended to limit the scope of the present invention, which is limited only by the appended claims.

[0010] Unless defined otherwise, all technical and scientific terms used herein have the same meaning as commonly understood to one of ordinary skill in the art to which this invention belongs. It should be appreciated that the term "substantially" is synonymous with terms such as "nearly", "very nearly", "about", "approximately", "around", "bordering on", "close to", "essentially", "in the neighborhood of", "in the vicinity of", etc., and such terms may be used interchangeably as appearing in the specification and claims. It should be appreciated that the term "proximate" is synonymous with terms such as "nearby", "close", "adjacent", "neighboring", "immediate", "adjoining", etc., and such terms may be used interchangeably as appearing in the specification and claims. Although any methods, devices or materials similar or equivalent to those described herein can be used in the practice or testing of the invention, the preferred methods, devices, and materials are now described.

[0011] Adverting to the figures, **Figure 1** is a front perspective view of furnace **100** with door **112** open to reveal mobile hearth skid **200** ("skid **200**") positioned inside furnace **100.** Door **112** is opened by wheeled hoists **112a.** Furnace **100** is an enclosure having top **114,** side walls **116,** and rear wall **118** opposite door **112.** It can be seen that the inner surfaces of side walls **116** and rear wall **118** are lined with refractory material **120.** In one embodiment, the refractory material lining **120** including ledge **122** is fabricated from firebrick and cast refractory material. Footings **124** extend along the bottom of the two opposing side walls **116** and rear wall **18.**

[0012] **Figure 2** is a second front perspective view of furnace **100** with skid **200** removed. Clearly seen is refractory lining **120** mounted on the inner surfaces of side walls **116** and rear wall **118.** Also seen is ledge **122** extending the length of side walls **116** and rear wall **118.** Ledge **122** includes ledge horizontal surface **122a** and ledge vertical surface **122b.** Not seen is a refractory lining mounted on the inner surface of door **112.** It can be seen that footings **124** form a gap **126** between the floor supporting furnace **100** and the bottom surface of ledge **122.**

[0013] **Figure 3** is a front perspective view of mobile hearth skid **200.** Base **202** includes top surface **204** ("surface **204**") (not seen) and base supports **206.** In an example embodiment, base **202** is fabricated from reinforced steel. Surface **204** is in the form of a table top extending between supports **206** and in turn bears refractory platform **208** ("platform **208**"). Platform **208** includes support surface **210** used to support castings as described below and is fabricated from refractory material. Side edges **212** and rear edge **214** (not shown) are shaped into shoulder **216** with horizontal surface **216a** and vertical surface **216b** as seen in **Figure 4.** In the embodiment shown, it can be seen that side edges **212** and rear edge **214** are continuous and part of integral platform **208.** The word integral in this context means that the component parts are formed together as a single unit. In an example embodiment, shoulder **216** may extend partly along each side edge **212** and/or rear edge **214.** In an example embodiment, shoulder **216** may extend continuously along each side edge **212** and/or rear edge **214** as seen in **Figure 3.**

[0014] **Figure 4** is a partial front view of refractory platform **208** showing shoulder **216** of one side edge **212.** Horizontal surface **216a** and vertical surface **216b** are shown with surface **216a** extending beyond perimeter edge **218** of mobile hearth skid **200.** Preferably, vertical surface **216b** is flush or even with the perimeter edge **218** of skid **200** as shown in **Figure 4.**

[0015] **Figure 5** is a bottom perspective view of transporter **300** depicting a plurality of rolling means **302** attached to or extending from bottom surface **304.** In an example embodiment, rolling means **302** are casters or wheels swiveling attached to transporter **300** to enable transporter **300** to move efficiently and smoothly in any direction. In an example embodiment, rolling means **302** are constructed so as to raise or lower transporter **300.** Transporter surface **306** can be used to carry mobile hearth skid **200** with or without refractory platform **208.** In a preferred embodiment transporter **300** is program-

mable, i.e., it is equipped with a programmable logic controller. Suitable transporters are manufactured by Italcarrelli Srl, Via Monte Rosa, 9 - 36072, Chiampo (VI) Italy.

[0016] **Figure 6A** is a front view of transporter **300** positioned between supports **206** of mobile hearth skid **200.** Rolling means **302** are seen in a lowered or nonextended position such that a gap is present between transporter surface **306** and base **202. Figure 6B** is the same view showing rolling means **302** raised or extended so that skid **200** is lifted raising supports **206** off the floor or ground and enabling transporter **300** to move or transport skid **200.** Such movement may be performed with or without castings supported on refractory surface **210.**

[0017] **Figure 7** is a front perspective view of the combination of furnace **100,** mobile hearth skid **200,** and transporter **300.** Transporter **300** is moved or is programmed to move between supports **206** of base **200.** Subsequently, transporter **300** carries skid **200** into furnace **100** with door **112** closing after skid **200** is lowered onto ledge **122** of refractory material **120.**

[0018] **Figure 8A** is a front view of skid **200** after it is carried into furnace **100** by transporter **300.** Rolling means **302** are seen extended and holding refractory platform **208** so that shoulder **216** is lifted above ledge **122. Figure 8B** is the same front view showing rolling means **302** retracted thereby lowering skid **200** and placing shoulder horizontal surface **216a** of shoulder **216** on horizontal surface **122a** of ledge **122** while shoulder vertical surface **216b** contacts the ledge vertical surface **122b** to form a refractory seal to reduce or prevent the escape of heat from furnace **100** during the heat treatment of castings C supported by refractory platform surface **306.**

[0019] **Figures 9A-9E** are front perspective views showing a single transporter **300** loading castings **C** and withdrawing castings **C** from a furnace **100. Figure 9A** is similar to **Figure 7** showing transporter **300** positioned to move between supports **206** of base **202** of mobile hearth skid **200.** Castings **C** are seen resting on top surface **210** of refractory platform **208.** Door **112** is open. It can be seen that furnace **100** includes refractory lining **120** with ledge **122. Figure 9B** shows transporter **300** lifting skid **200** including castings C and moving skid **200** toward furnace **100.**

[0020] **Figure 9C** depicts castings **C** supported by platform **208** with rolling means **302** (not shown) retracted so as to lower skid **200** with platform **208** onto ledge **122.** It can be seen that the refractory seal is formed by the contacting and sealing of shoulder horizontal surface **216a** and shoulder vertical surface **216b** with ledge horizontal surface **122a** and ledge vertical surface **122b,** respectively. Finally, **Figure 9D** shows transporter **300** withdrawn from furnace **100** after which door **112** is lowered and drawn by hinges **112b** into contact with platform **208** to complete the refractory seal as seen in **Figure 9E.** Preferably, skid **200** is sized and shaped in conjunction with ledge **122** and gap **126** so the weight of platform **208** (and castings **C,** if applicable) is supported by platform supports **206** to prevent the weight of skid **200** and castings **C** from being supported by ledge **122.**

[0021] **Figure 10** is top perspective schematic view of a plurality of furnaces **100** and cooling chambers **100a** (collectively "chambers") being loaded and unloaded by a single transporter **300.** Because curing cycles for castings are often long it is possible for a single transporter **300** to load and unload several furnaces **100** and/or cooling chambers 100a. If transporter **300** is programmable, only a solid floor and guidance system will be required to enable a single transporter **300** to be used with multiple furnaces **100** and/or cooling chambers **100a.** In an example embodiment, more than one transporter **300** may be used to load and unload a plurality of furnaces. The programming can include instructions as to when to load or unload furnaces **100**/chambers **100a** as well as movement and alignment instructions. **Figure 10** shows as well an assembly at least one a mobile hearth skid **200** and a plurality of furnaces **100** and/or cooling chambers. The features of the mobile hearth skid **200** and the furnace **100** are described already in Figure 1 through 9.

[0022] An assembly with at least one a mobile hearth skid **200** and a plurality of furnaces **100** and/or cooling chambers is a further embodiment of the invention. The at least one a mobile hearth skid **100** including a base **202,** said base **202** including a top horizontal surface **204** with a base perimeter edge **218** and at least two supports **206** extending from said top horizontal surface **204.** The refractory platform **208** is supported by the top horizontal surface **204** and having a refractory perimeter edge including a front perimeter edge, a rear perimeter edge **214,** and at least two side perimeter edges **212.** Said rear perimeter edge **214** and said at least two side perimeter edges **212** form a continuous shoulder **216** extending beyond said base perimeter edge **216.** The shoulder **216** has a shoulder horizontal surface **216a** and a shoulder vertical surface **216b.**

[0023] Each of said plurality of furnaces **100** and/or cooling chambers includes an enclosure having footings **124,** a top **114,** a rear wall **118,** at least two side walls **116,** and a door **112** opposing said rear wall **118.** Each of said top **114,** at least two side walls **116,** and said door **112** include an inner surface. A refractory lining **120** is attached to each of said top **114** inner surface, said at least two side wall **116** inner surfaces, and said door **112** inner surface and forming a ledge **122** at the bottom edges of said refractory linings **120** a continuous ledge at the bottom edges of said refractory linings. Said ledge **122** has a ledge vertical surface **122b** and a ledge horizontal surface **122a.** A gap **126** is formed by said furnace supports (footings **124)** between a bottom surface of said ledge **122** and the supports **206** of the removable hearth skid **200.**

[0024] In case the removable hearth skid **200** is in one of the furnaces **100** the shoulder vertical surface **216b** and said shoulder horizontal surface **216a** contacts said ledge vertical surface **122b** and said ledge horizontal surface **122a,** respectively, to form a refractory seal.

[0025] According to one embodiment, the assembly can have a single mobile transporter **300** to be positioned under said top horizontal surface **204** of one of said mobile hearth skids **200.** According to a further embodiment a plurality of furnaces **100** and/or cooling chambers are part of the assembly and said transporter **300** is programmable. The transporter **300** comprises a plurality of extendable rolling means **302.** The assembly may comprise a plurality of transporters **300.**

[0026] According to the removable refractory seal for a furnace **100** is formed by a continuous ledge **122** fabricated from refractory material and positioned proximate a bottom edge of said refractory material lining **120** a rear wall and proximate a bottom edge of at least two side walls **116** of a first furnace **100,** said ledge **122** having a first horizontal surface **122a** and a first vertical surface **122b.** A continuous shoulder **216** is formed in a rear edge **214** and at least two side edges **212** of a first mobile refractory platform **200.** The shoulder **216** has a second horizontal surface **216a** and a second vertical surface **216b.** The second horizontal surface **216a** is removable placed in contact with and sealed against said first horizontal surface **122a** and said second vertical surface **216b** is removable contacted with and sealed against said first vertical surface **122b.**

[0027] According to the embodiment of the assembly, a second furnace **100** has said continuous ledge **122** and said second horizontal surface **216a** of said first mobile refractory platform is removable placed in contact with and sealed against said first horizontal surface **122a** of said second furnace **100** and said second vertical surface **216b** of said first mobile refractory platform is removable contacted with and sealed against said first vertical surface **122b** of said second furnace **100.**

[0028] Thus it is seen that the objects of the invention are efficiently obtained. Although changes and modifications to the invention should be readily apparent to those having ordinary skill in the art, which changes would not depart from the scope of the invention as claimed.

Claims

1. A removable hearth skid (200) for a furnace (100) and/or cooling chamber (100a) arrangement comprising:

   a base (202), said base (202) including a top horizontal surface (204) with a base perimeter edge (218); and,
   a refractory platform (208) supported by said top horizontal surface (204) and having a refractory perimeter edge including a front perimeter edge, a rear perimeter edge (214), and at least two side perimeter edges (212);
   said base (202) comprises at least two supports (206) extending from said top horizontal surface (204), so that said at least two supports (206) and said base (202) form an opening;
   at least one mobile transporter (300) positionable in said opening under said base (202) and between said at least two supports (206) of skid (200); and
   said rear perimeter edge (214) and said at least two side perimeter edges (212) form a continuous shoulder (216) extending beyond said base perimeter edge (218), said shoulder (216) having a shoulder horizontal surface (216a) and a shoulder vertical surface (216b) in such a way that said mobile transporter (300) is liftable for reception and withdrawal of said skid (200) into and out of said opening respectively.

2. The mobile removable hearth skid (200) for a furnace (100) and/or cooling chamber (100a) arrangement as recited in Claim 1 wherein two supports (206) are provided, and each of said two supports (206) extending under two opposing sides of said base perimeter edge (218).

3. The mobile removable hearth skid (200) for a furnace (100) and/or cooling chamber (100a) arrangement as recited in any one of the preceding Claims wherein said transporter (300) comprises a plurality of extendable rolling means (302).

4. The mobile removable hearth skid (200) for a furnace (100) and/or cooling chamber (100a) arrangement as recited in any one of the preceding Claims wherein said transporter (300) is programmable.

5. An assembly of at least one removable mobile hearth skid (200) for a furnace (100) and/or cooling chamber (100a) arrangement as recited in any one of the preceding Claims and at least one of furnace (100) and/or cooling chamber (100a).

6. The assembly as recited in Claim 5, wherein a single mobile transporter (300) is provided.

7. The assembly as recited in Claim 5, wherein a plurality of transporters (300) is provided.

8. The assembly as recited in any one of Claims 5 through 7, wherein a plurality of mobile hearth skids (200) and a plurality of furnaces (100) are provided.

9. The assembly as recited in any one of Claims 5 through 8 wherein said at least one furnace (100) and/or cooling chamber (100a) comprises:

   an enclosure having footings (124), a top (114), a rear wall (118), at least two side walls (116), and a door (112) opposing said rear wall (118), wherein each of said top (114), said rear wall (118), at least two side walls (116), and said door

(112) include an inner surface;
a refractory lining (120) attached to each of said top (114) inner surface, said rear wall (118) inner surface, said at least two side wall (116) inner surfaces, and said door (112) inner surface;
a continuous ledge (122) at or proximate bottom edges of said refractory linings (120) of said side walls (116) and said rear wall (118), wherein said continuous ledge (122) has a ledge vertical surface (122b) and a ledge horizontal surface (122a);
wherein a gap (126) is formed by furnace footings (124) between a bottom surface of said ledge (122) and a surface supporting said footings (124); and
wherein said shoulder vertical surface (216b) and said shoulder horizontal surface (216a) of said at least one skid (200) contact said continuous ledge vertical surface (122b) and said ledge horizontal surface (122a) of furnace (100) and/or cooling chamber (100a), respectively, to form a refractory seal, if the removable hearth skid (200) is in the furnace (100) and/or cooling chamber (100a).

10. The assembly as recited in any one of Claims 5 through 9 wherein,
the continuous ledge (122) is fabricated from a refractory material and mounted on said rear wall (118); and,
the continuous shoulder (216) is formed in the rear perimeter edge (214) and the at least two side edges (212) of a refractory platform (208) of each of said at least one plurality of mobile hearth skids (200), wherein said second horizontal surface (216a) is removable placed in contact with and sealed against said first horizontal surface (122a) and said second vertical surface (216b) is removable contacted with and sealed against said first (122b) vertical surface.

Patentansprüche

1. Entfernbarer Gleit-Herdeinsatz (200) für eine Ofen- (100) und/oder Kühlkammer-Anordnung (100a), umfassend:

eine Basis (202), wobei die Basis (202) eine obere horizontale Oberfläche (204) mit einem Basisumfangsrand (218) aufweist; und
eine feuerfeste Plattform (208), die von der oberen horizontalen Oberfläche (204) getragen wird und einen Feuerfestumfangsrand aufweist, der einen vorderen Umfangsrand, einen hinteren Umfangsrand (214) und wenigstens zwei seitliche Umfangsränder (212) aufweist;
wobei die Basis (202) wenigstens zwei Stützen (206) umfasst, die sich derart von der oberen horizontalen Oberfläche (204) aus erstrecken, dass die wenigstens zwei Stützen (206) und die Basis (202) eine Öffnung bilden;
wenigstens einen mobilen Transporter (300), der in der Öffnung unter der Basis (202) und zwischen den wenigstens zwei Stützen (206) des Einsatzes (200) positionierbar ist; und
wobei der hintere Umfangsrand (214) und die wenigstens zwei seitlichen Umfangsränder (212) eine durchgehende Schulter (216) bilden, die sich über den Basisumfangsrand (218) hinaus erstreckt, wobei die Schulter (216) eine horizontale Schulteroberfläche (216a) und eine vertikale Schulteroberfläche (216b) aufweist, so dass der mobile Transporter (300) zur Aufnahme und zum Rückzug des Einsatzes (200) in die beziehungsweise aus der Öffnung anhebbar ist.

2. Mobiler entfernbarer Gleit-Herdeinsatz (200) für eine Ofen- (100) und/oder Kühlkammer-Anordnung (100a) nach Anspruch 1, wobei zwei Stützen (206) vorgesehen sind und wobei sich jede der zwei Stützen (206) unter zwei gegenüberliegenden Seiten des Basisumfangsrands (218) erstreckt.

3. Mobiler entfernbarer Gleit-Herdeinsatz (200) für eine Ofen- (100) und/oder Kühlkammer-Anordnung (100a) nach einem der vorhergehenden Ansprüche, wobei der Transporter (300) eine Vielzahl von ausfahrbaren Rollmitteln (302) umfasst.

4. Mobiler entfernbarer Gleit-Herdeinsatz (200) für eine Ofen- (100) und/oder Kühlkammer-Anordnung (100a) nach einem der vorhergehenden Ansprüche, wobei der Transporter (300) programmierbar ist.

5. Zusammenbau aus wenigstens einem entfernbaren mobilen Gleit-Herdeinsatz (200) für eine Ofen- (100) und/oder Kühlkammer-Anordnung (100a) nach einem der vorhergehenden Ansprüche und wenigstens einem Ofen (100) und/oder wenigstens einer Kühlkammer (100a).

6. Zusammenbau nach Anspruch 5, wobei ein einziger mobiler Transporter (300) vorgesehen ist.

7. Zusammenbau nach Anspruch 5, wobei eine Vielzahl von Transportern (300) vorgesehen ist.

8. Zusammenbau nach einem der Ansprüche 5 bis 7, wobei eine Vielzahl von mobilen Herdeinsätzen (200) und eine Vielzahl von Öfen (100) vorgesehen sind.

9. Zusammenbau nach einem der Ansprüche 5 bis 8, wobei der wenigstens eine Ofen (100) und/oder die wenigstens eine Kühlkammer (100a) Folgendes umfassen:

ein Gehäuse mit Fußteilen (124), einer Oberseite (114), einer Rückwand (118), wenigstens zwei Seitenwänden (116) und einer Tür (112), die der Rückwand (118) gegenüberliegt, wobei jede von der Oberseite (114), der Rückwand (118), den wenigstens zwei Seitenwänden (116) und der Tür (112) eine Innenfläche aufweist;
eine feuerfeste Auskleidung (120), die an jeder von der Innenfläche der Oberseite (114), der Innenfläche der Rückwand (118), den Innenflächen der wenigstens zwei Seitenwände (116) und der Innenfläche (112) der Tür befestigt ist;
einen durchgehenden Absatz (122) an den oder in der Nähe der unteren Ränder(n) der feuerfesten Auskleidungen (120) der Seitenwände (116) und der Rückwand (118), wobei der durchgehende Absatz (122) eine vertikale Absatzoberfläche (122b) und eine horizontale Absatzoberfläche (122a) aufweist;
wobei durch die Ofenfußteile (124) ein Spalt (126) zwischen einer unteren Oberfläche des Absatzes (122) und einer Oberfläche, welche die Fußteile (124) trägt, gebildet wird; und
wobei die vertikale Schulteroberfläche (216b) und die horizontale Schulteroberfläche (216a) des wenigstens einen Einsatzes (200) die durchgehende vertikale Absatzoberfläche (122b) beziehungsweise die horizontale Absatzoberfläche (122a) des Ofens (100) und/oder der Kühlkammer (100a) berühren, um eine feuerfeste Dichtung zu bilden, wenn sich der entfernbare Gleit-Herdeinsatz (200) im Ofen (100) und/oder in der Kühlkammer (100a) befindet.

10. Zusammenbau nach einem der Ansprüche 5 bis 9, wobei
der durchgehende Absatz (122) aus einem feuerfesten Material hergestellt ist und an der Rückwand (118) montiert ist; und
die durchgehende Schulter (216) in dem hinteren Umfangsrand (214) und den wenigstens zwei Seitenrändern (212) einer feuerfesten Plattform (208) von jedem von der wenigstens einen Vielzahl von mobilen Herdeinsätzen (200) gebildet ist, wobei die zweite horizontale Oberfläche (216a) entfernbar in Kontakt mit und dichtschließend an der ersten horizontalen Oberfläche (122a) angeordnet ist und die zweite vertikale Oberfläche (216b) entfernbar mit der ersten (122b) vertikalen Oberfläche in Kontakt gebracht und dichtschließend an dieser angeordnet ist.

Revendications

1. Sole mobile glissante (200) pour un arrangement de four (100) et/ou de chambre de refroidissement (100a) comprenant :
une base (202), ladite base (202) comportant une surface horizontale de dessus (204) avec un bord de périmètre de base (218) ; et
une plateforme réfractaire (208) supportée par ladite surface horizontale de dessus (204) et ayant un bord de périmètre réfractaire comportant un bord de périmètre avant, un bord de périmètre arrière (214), et au moins deux bords de périmètre de côté (212) ;
ladite base (202) comprend au moins deux supports (206) s'étendant depuis ladite surface horizontale de dessus (204), de sorte que lesdits au moins deux supports (206) et ladite base (202) forment une ouverture ;
au moins un transporteur mobile (300) positionnable dans ladite ouverture sous ladite base (202) et entre lesdits au moins deux supports (206) de sole mobile glissante (200) ; et
ledit bord de périmètre arrière (214) et lesdits au moins deux bords de périmètre de côté (212) forment un épaulement continu (216) s'étendant au-delà dudit bord de périmètre de base (218), ledit épaulement (216) ayant une surface horizontale d'épaulement (216a) et une surface verticale d'épaulement (216b) de sorte que ledit transporteur mobile (300) puisse être levé pour la réception et le retrait de ladite sole mobile glissante (200) dans et hors de ladite ouverture, respectivement.

2. Sole mobile glissante (200) pour un arrangement de four (100) et/ou de chambre de refroidissement (100a) selon la revendication 1, dans lequel deux supports (206) sont prévus, et chacun desdits deux supports (206) s'étendant sous deux côtés opposés dudit bord de périmètre de base (218).

3. Sole mobile glissante (200) pour un arrangement de four (100) et/ou de chambre de refroidissement (100a) selon l'une quelconque des revendications précédentes, dans lequel ledit transporteur (300) comprend une pluralité de moyens de roulement extensibles (302).

4. Sole mobile glissante (200) pour un arrangement de four (100) et/ou de chambre de refroidissement (100a) selon l'une quelconque des revendications précédentes, dans lequel ledit transporteur (300) est programmable.

5. Ensemble d'au moins une sole mobile glissante (200) pour un arrangement de four (100) et/ou de chambre de refroidissement (100a) selon l'une quelconque des revendications précédentes et au moins l'un d'un four 100) et/ou d'une chambre de refroidissement (100a).

6. Ensemble selon la revendication 5, dans lequel un

transporteur mobile (300) unique est prévu.

7. Ensemble selon la revendication 5, dans lequel une pluralité de transporteurs (300) est prévue.

8. Ensemble selon l'une quelconque des revendications 5 à 7, dans lequel une pluralité de soles mobiles glissantes (200) et une pluralité de fours (100) sont prévues.

9. Ensemble selon l'une quelconque des revendications 5 à 8, dans lequel ledit au moins un four (100) et/ou ladite au moins une chambre de refroidissement (100a) comprennent :

une enceinte ayant des socles (124), un dessus (114), une paroi arrière (118), au moins deux parois de côté (116), et une porte (112) opposée à ladite paroi arrière (118), dans lequel chacun dudit dessus (114), de ladite paroi arrière (118), desdits au moins deux parois de côté (116) et de ladite porte (112) comporte une surface interne ;
un garnissage réfractaire (120) fixé à chacune de la surface interne dudit dessus (114), de la surface interne de ladite paroi arrière (118), des surfaces internes desdites au moins deux parois de côté (116) et de la surface interne de ladite porte (112) ;
une corniche continue (122) au niveau ou à proximité de bords de dessous desdits garnissages réfractaires (120) desdites parois de côté (116) et de ladite paroi arrière (118), dans lequel ladite corniche continue (122) a une surface verticale de corniche (122b) et une surface horizontale de corniche (122a) ;
dans lequel un écartement (126) est formé par des socles de four (124) entre une surface de dessous de ladite corniche (122) et une surface supportant lesdits socles (124) ; et
dans lequel ladite surface verticale d'épaulement (216b) et ladite surface horizontale d'épaulement (216a) de ladite au moins une sole mobile glissante (200) entrent en contact avec ladite surface verticale de corniche continue (122b) et ladite surface horizontale de corniche (122a) du four (100) et/ou de la chambre de refroidissement (100a), respectivement, pour former un joint réfractaire, si la sole mobile glissante (200) est dans le four (100) et/ou la chambre de refroidissement (100a).

10. Ensemble selon l'une quelconque des revendications 5 à 9, dans lequel
la corniche continue (122) est fabriquée à partir d'un matériau réfractaire et montée sur ladite paroi arrière (118) ; et,
l'épaulement continu (216) est formé dans le bord de périmètre arrière (214) et les au moins deux bords de côté (212) d'une plateforme réfractaire (208) de chacun de ladite au moins une pluralité de soles mobiles glissantes (200), dans lequel ladite seconde surface horizontale (216a) est placée amovible en contact avec et scellée contre la première surface horizontale (122a) et ladite seconde surface verticale (216b) est mise en contact de façon amovible avec et scellée contre ladite première surface verticale (122b).

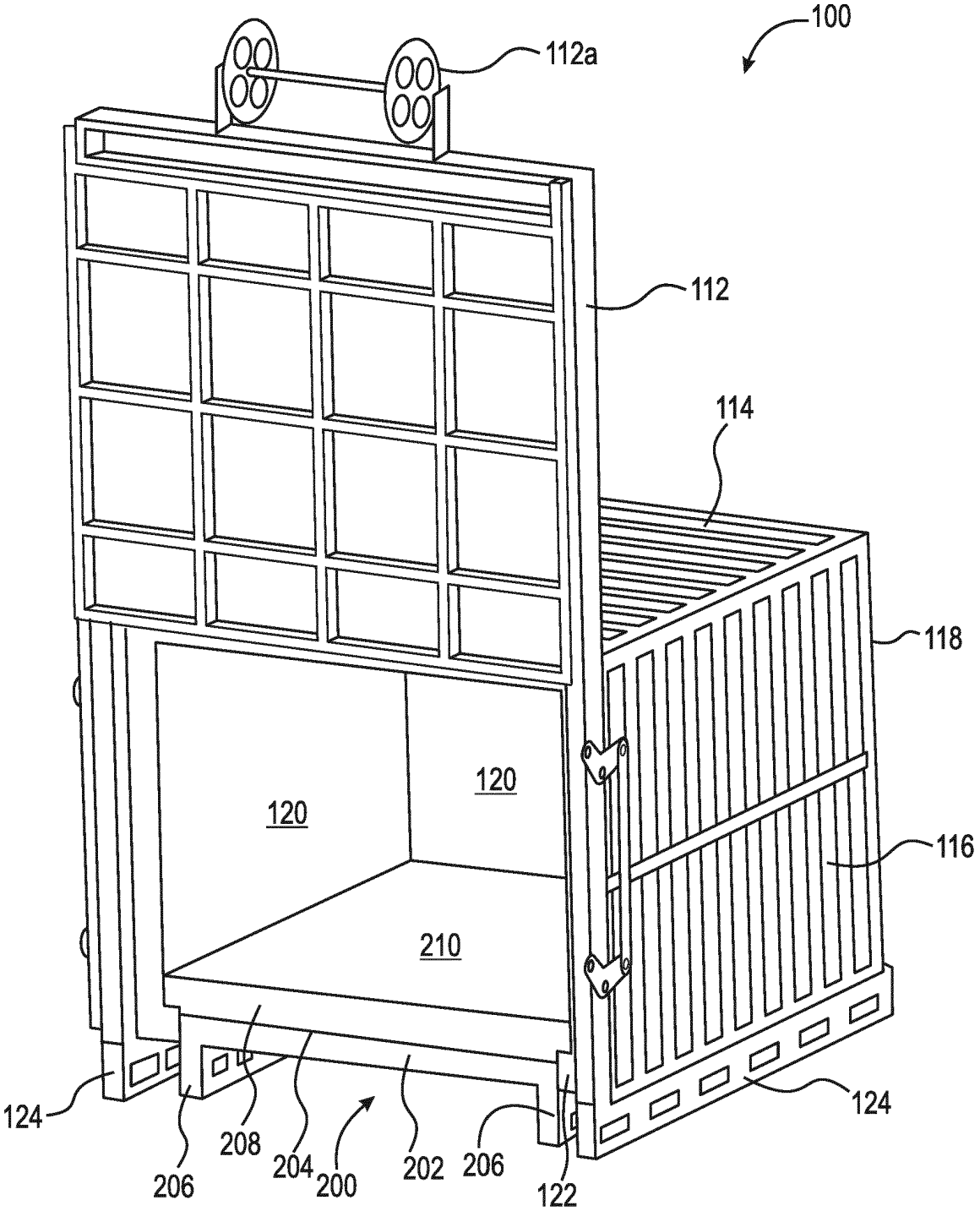
100
112a
112
114
118
120
120
116
210
124
124
206
208
204
200
202
206
122

Fig. 1

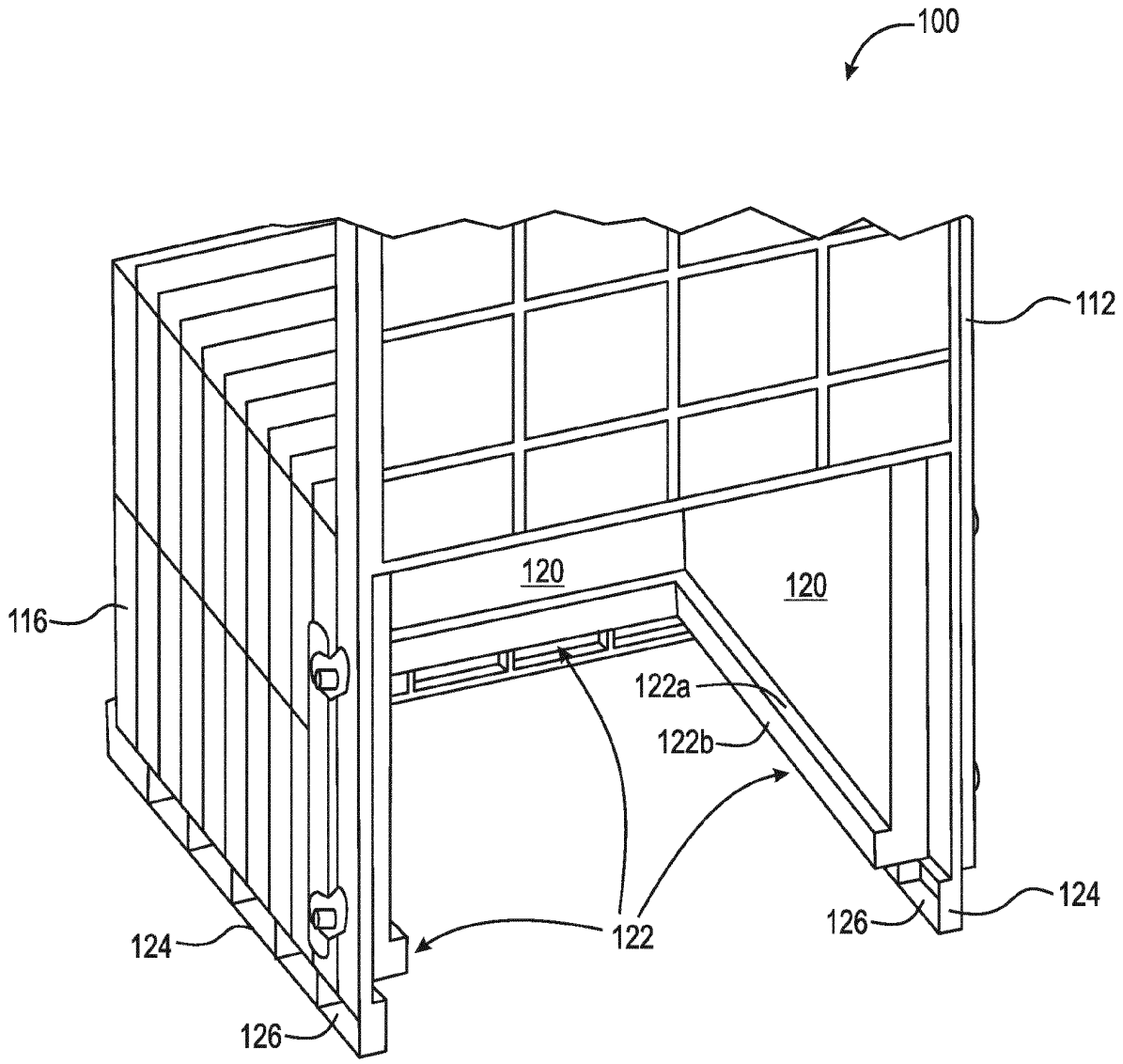

Fig. 2

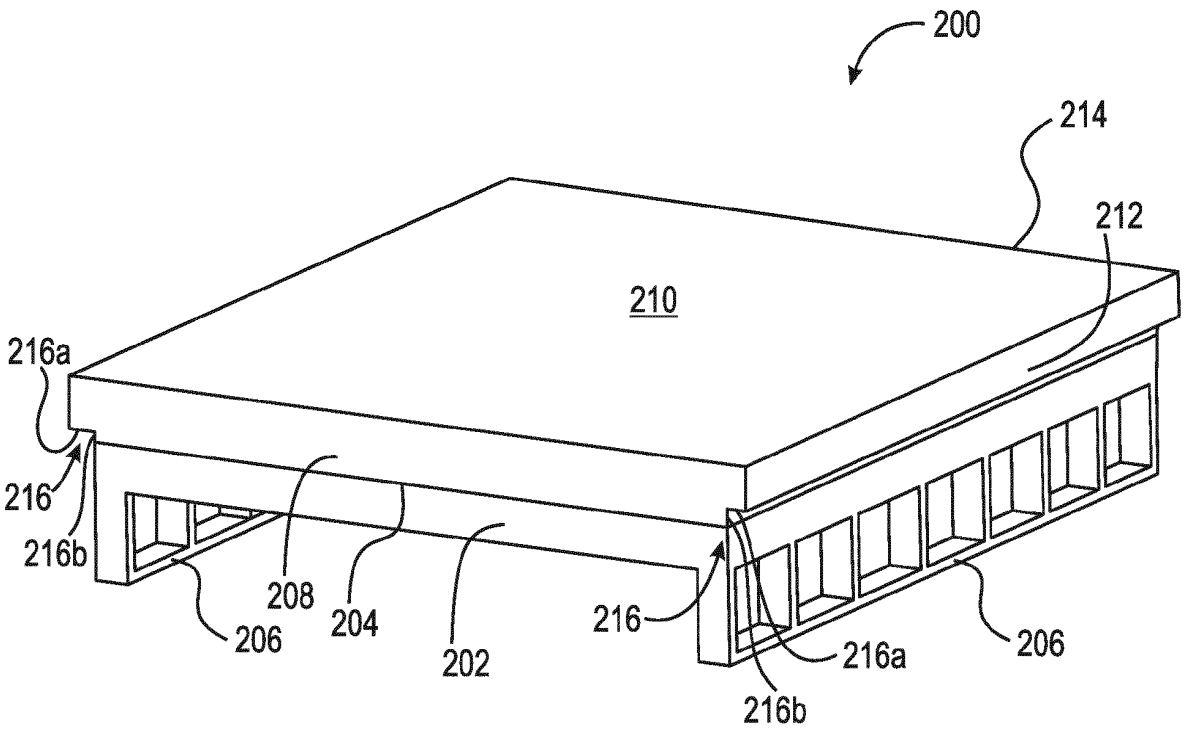

Fig. 3

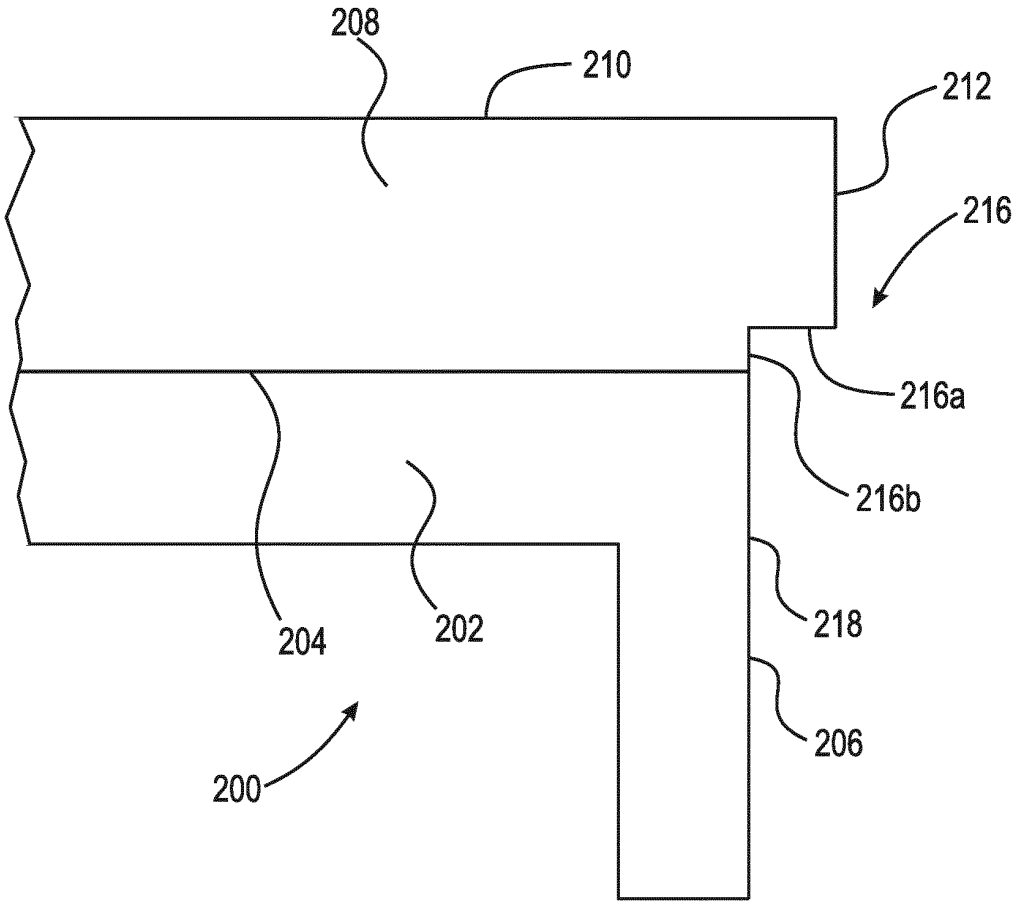

Fig. 4

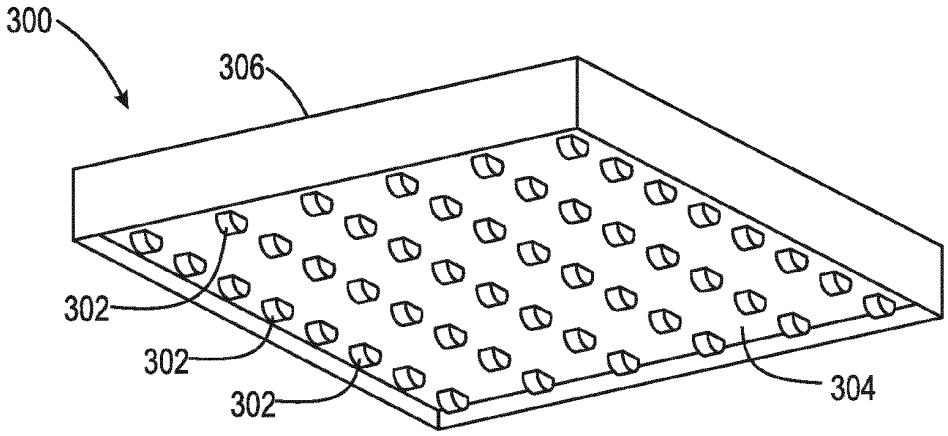

Fig. 5

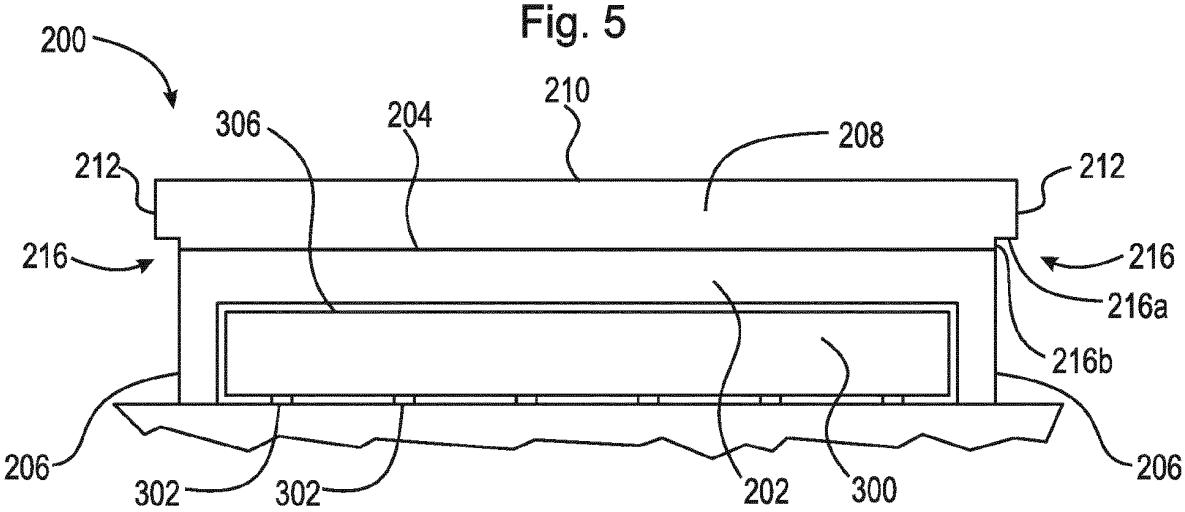

Fig. 6A

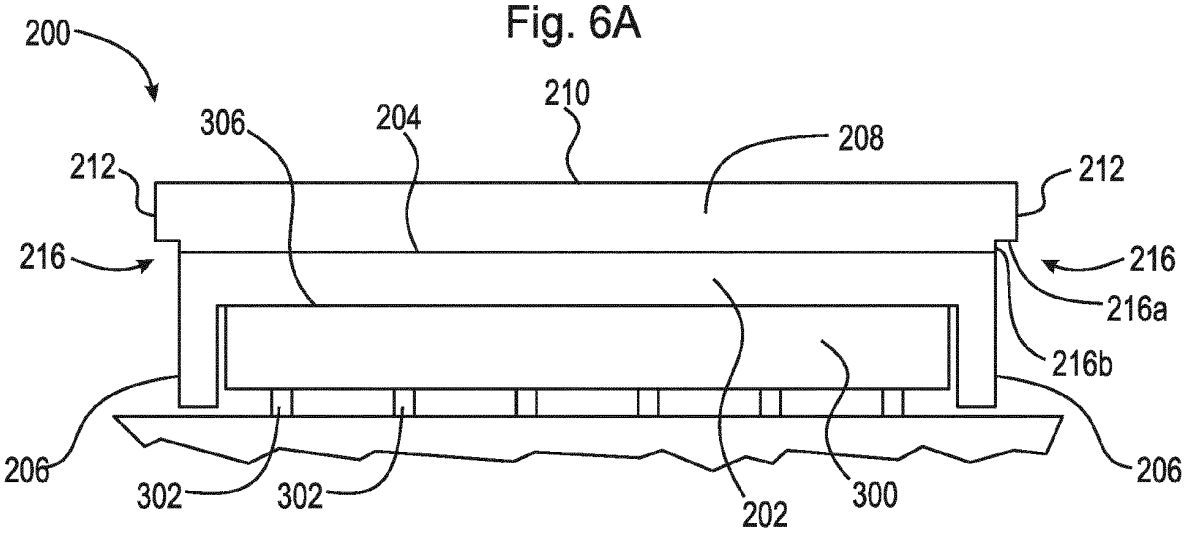

Fig. 6B

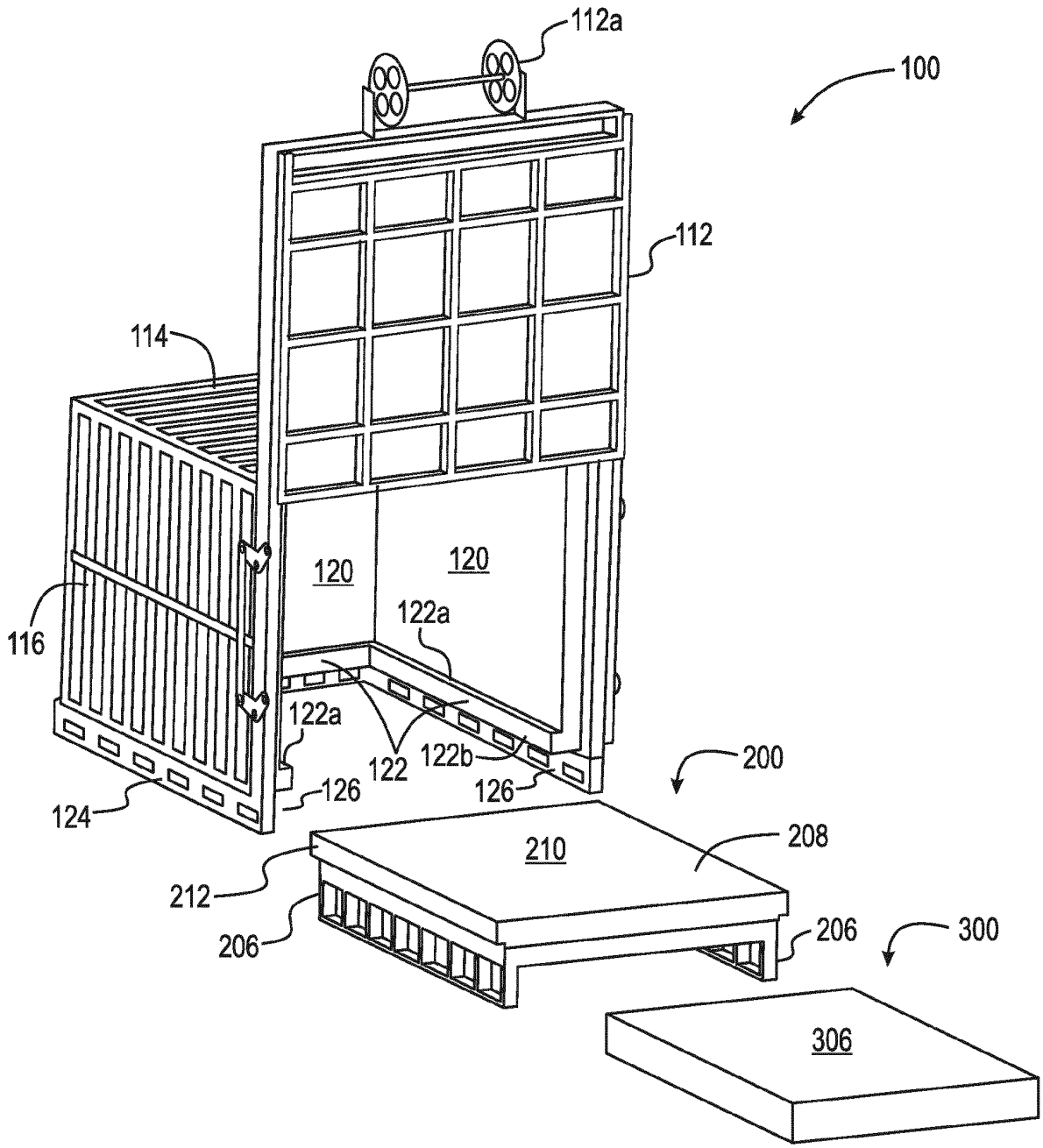
112a
100
112
114
120
120
122a
116
122a
122
122b
126
126
124
200
210
208
212
206
206
300
306

Fig. 7

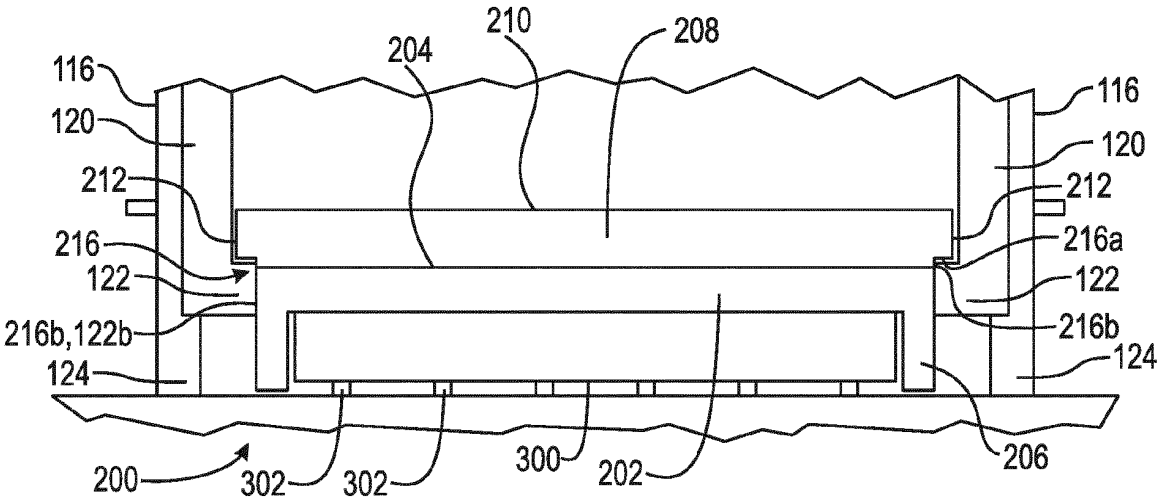
210
208
204
116
120
212
216
122
216b,122b
124
116
120
212
216a
122
216b
124
200
302
302
300
202
206

Fig. 8A

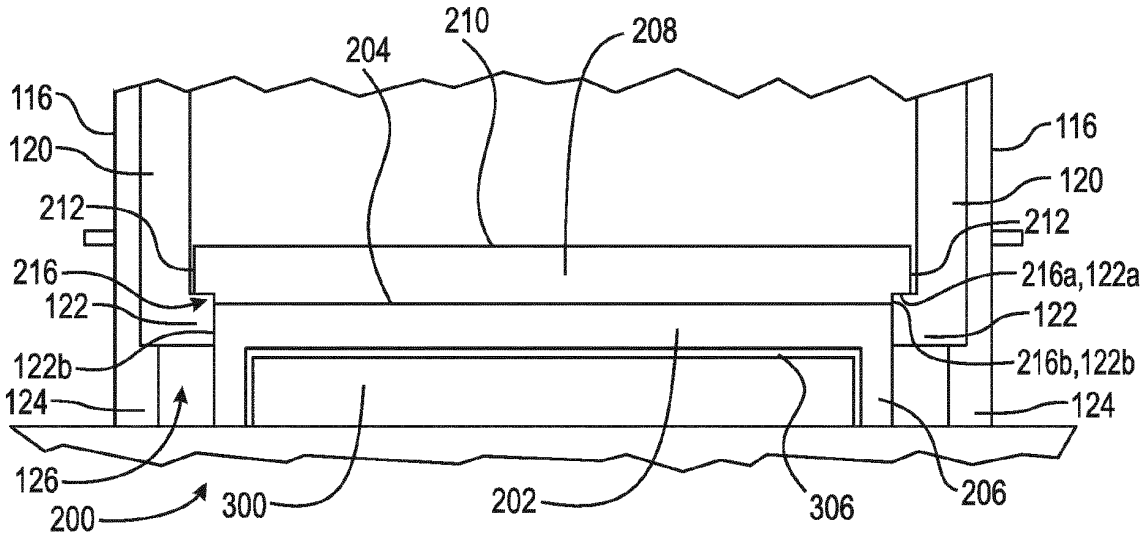
210
208
204
116
120
212
216
122
122b
124
126
200
300
202
306
206
116
120
212
216a,122a
122
216b,122b
124

Fig. 8B

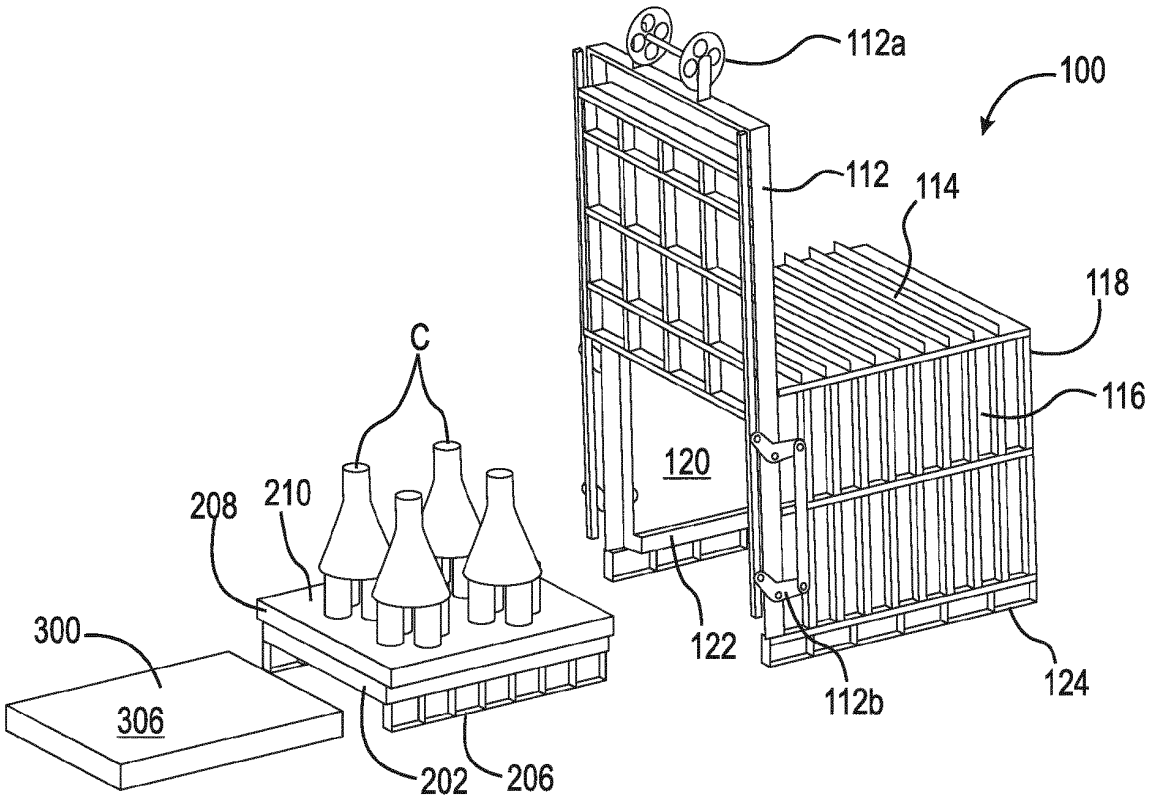
112a
100
112
114
118
116
C
120
208
210
300
306
122
112b
124
202
206

Fig. 9A

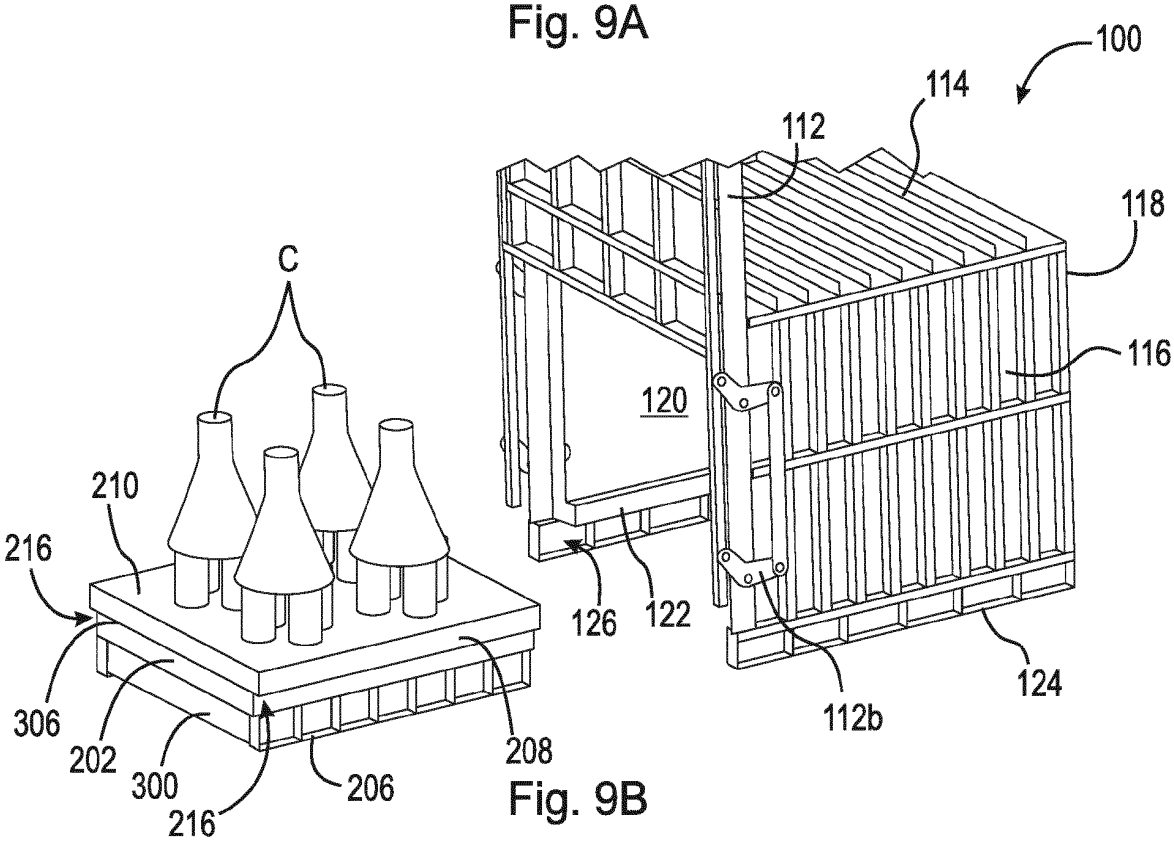
100
114
112
118
C
116
120
210
216
126
122
306
202
300
216
206
208
112b
124

Fig. 9B

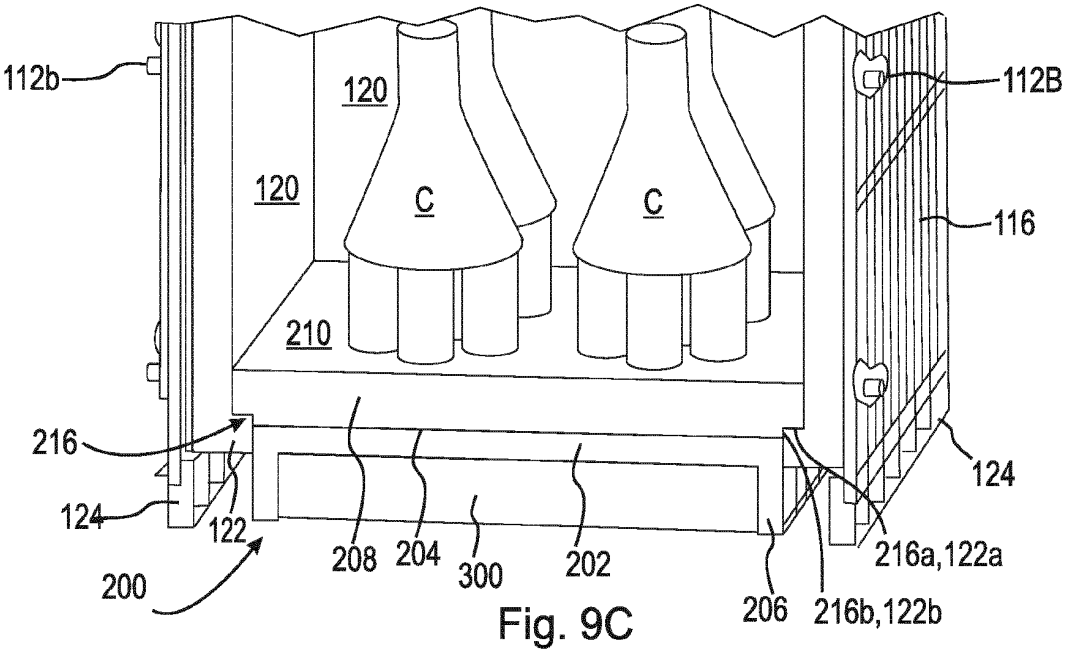
112b
120
120
C
C
112B
116
210
216
124
124
122
208
204
300
202
216a,122a
200
206
216b,122b

Fig. 9C

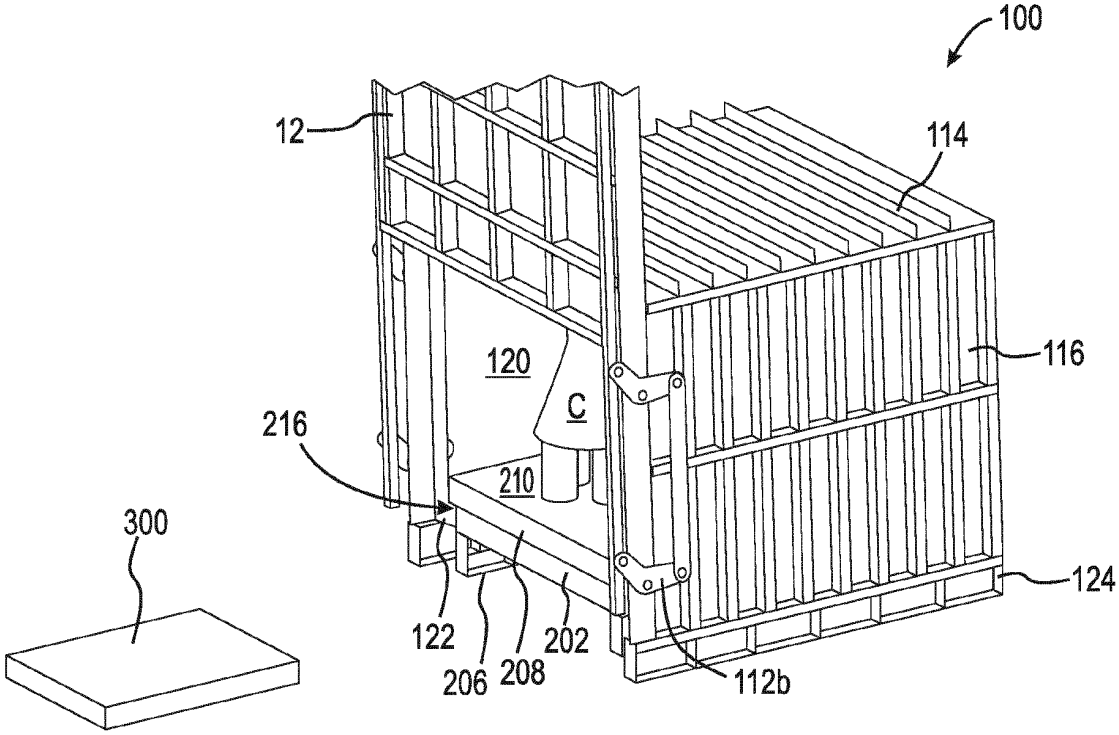
100
12
114
116
120
C
216
210
300
124
122
206
208
202
112b

Fig. 9D

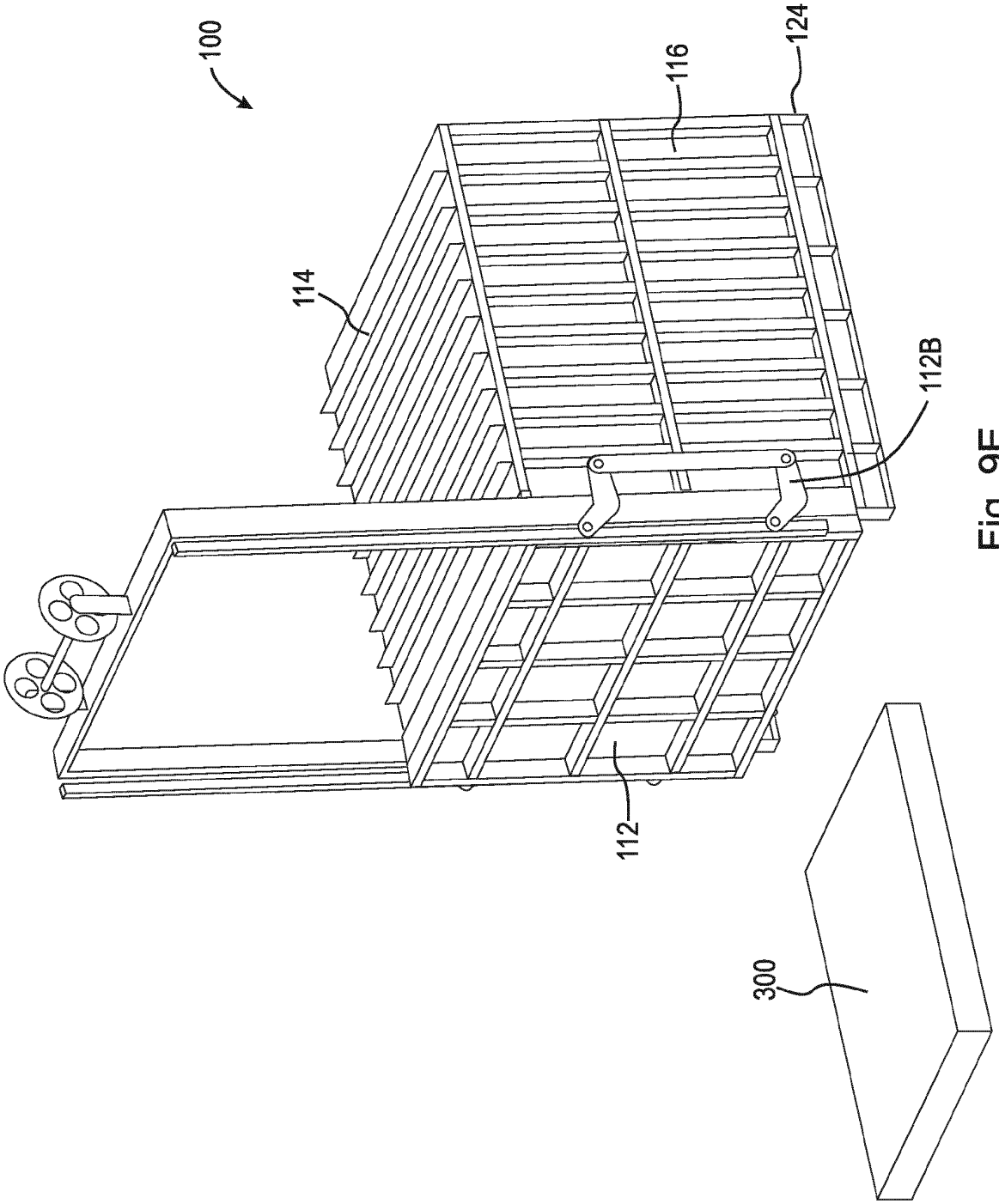

Fig. 9E

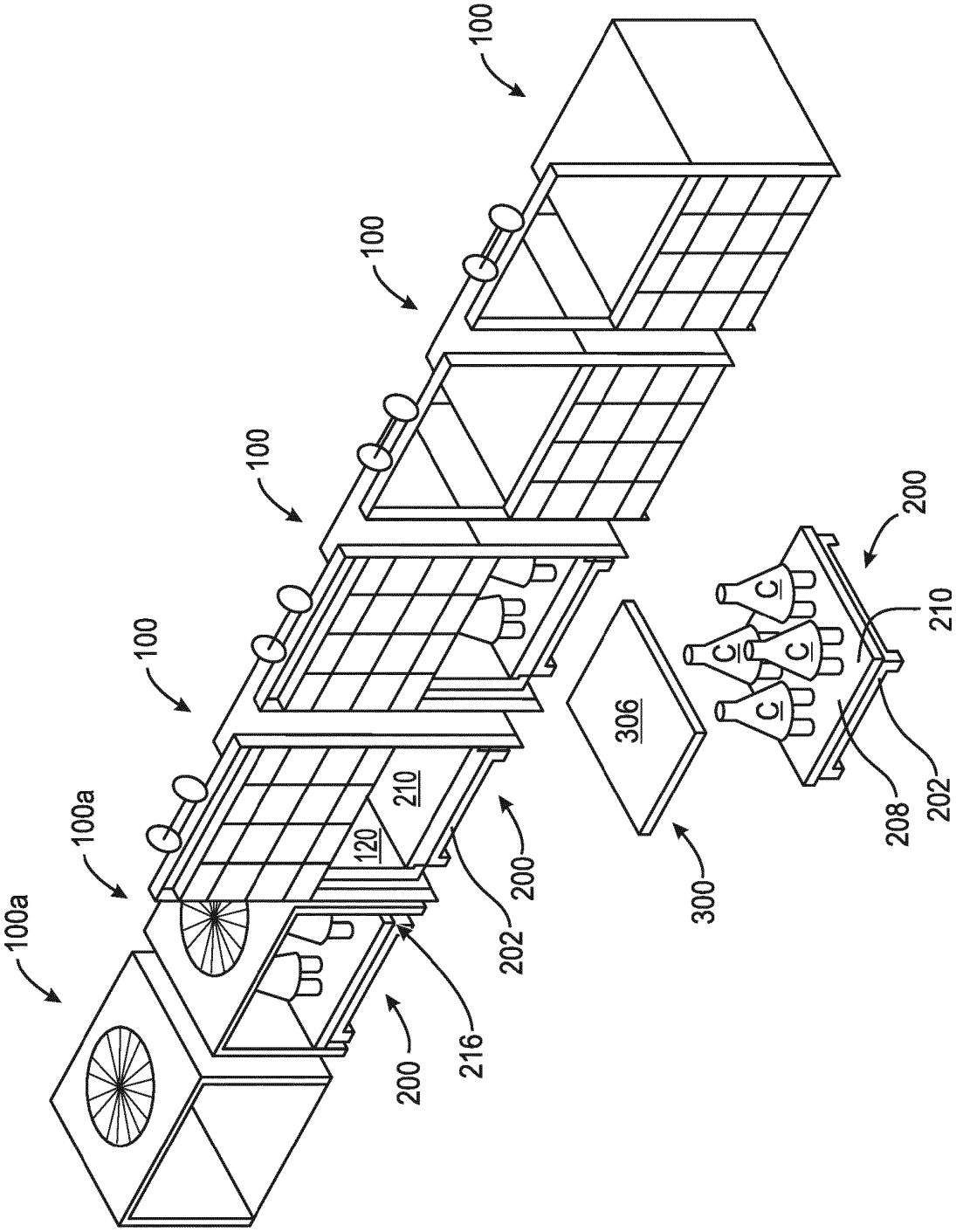
100
100
100
100
100a
100a
120
210
200
202
216
200
306
300
C
C
C
C
200
210
208
202

Fig. 10

REFERENCES CITED IN THE DESCRIPTION

This list of references cited by the applicant is for the reader's convenience only. It does not form part of the European patent document. Even though great care has been taken in compiling the references, errors or omissions cannot be excluded and the EPO disclaims all liability in this regard.

Patent documents cited in the description

- FR 2323969 A1 **[0002]**
- EP 1146306 A1 **[0002]**
- DE 2512485 A1 **[0002]**
- US 3476368 A **[0002]**