US008770377B2

(12) **United States Patent**
Seger et al.

(10) **Patent No.: US 8,770,377 B2**
(45) **Date of Patent: Jul. 8, 2014**

(54) **BUFFER MEANS FOR CONTAINERS AND METHOD FOR BUFFERING CONTAINERS**

(75) Inventors: **Martin Seger**, Neumarkt i.d. Opf. (DE); **Johann Huettner**, Mallersdorf-Pfaffenberg (DE)

(73) Assignee: **Krones AG**, Neutraubling (DE)

(*) Notice: Subject to any disclaimer, the term of this patent is extended or adjusted under 35 U.S.C. 154(b) by 115 days.

(21) Appl. No.: **13/193,448**

(22) Filed: **Jul. 28, 2011**

(65) **Prior Publication Data**

US 2012/0024660 A1 Feb. 2, 2012

(30) **Foreign Application Priority Data**

Jul. 30, 2010 (DE) 10 2010 036 771
Mar. 24, 2011 (DE) 10 2011 001 532

(51) **Int. Cl.**
B65G 1/00 (2006.01)

(52) **U.S. Cl.**
CPC ***B65G 1/00*** (2013.01)
USPC **198/347.4**; 198/347.1

(58) **Field of Classification Search**
CPC .. A24C 5/35; B65G 47/5122; B65G 47/5131; B41J 11/007; B41J 2/155
USPC 198/347.1, 594; 347/104, 42
See application file for complete search history.

(56) **References Cited**

U.S. PATENT DOCUMENTS

4,413,724 A * 11/1983 Fellner 198/594
4,513,858 A 4/1985 Fellner et al.
5,365,721 A * 11/1994 Focke 53/463
5,685,414 A 11/1997 Nerenhausen, Sr.
6,497,321 B2 12/2002 Horton et al.
6,712,220 B2 * 3/2004 Ruigrok et al. 209/592
7,021,452 B2 4/2006 Horton et al.
7,926,642 B2 4/2011 Huettner et al.
2003/0209409 A1 11/2003 Horton et al.

FOREIGN PATENT DOCUMENTS

CA	2364216	6/2003
DE	202004016069	12/2005
DE	202006000870	2/2007
DE	20221836 U1	5/2008
EP	1849725	10/2007
EP	2010442	1/2009
FR	2745804 A1	9/1997
FR	2907107 B1	4/2008
FR	2953502 A1	6/2011
WO	2011012802 A1	2/2011

* cited by examiner

Primary Examiner — Gene Crawford
Assistant Examiner — Lester Rushin
(74) *Attorney, Agent, or Firm* — Simpson & Simpson, PLLC

(57) **ABSTRACT**

A buffer means (**1**) and a method for buffering containers (**2**), in particular in a container handling apparatus, like for example bottles in a bottle filling apparatus, is described. The buffer means (**1**) comprises at least a first conveyor track (**31**). Furthermore at least a second conveyor track (**32**) is provided, which is drivable along a second transport direction (TR**2**). The first conveyor track (**31**) and the second conveyor track (**32**) are parallel to each other and form a buffer module (**30**). A transfer device (**36**) transfers the containers (**2**) from an infeed conveyor track (**31**E) onto an outlet conveyor track (**32**A) of the buffer module (**30**). By means of a sliding device the required buffer capacity of the buffer means (**1**) can be set. Between the infeed conveyor track (**31**E) and the outlet conveyor track (**32**A) of a buffer module (**30**) at least two further drivable transfer conveyors (**31**, **32**) are provided. Thus a closed surface of the buffer module (**30**) is created.

37 Claims, 23 Drawing Sheets

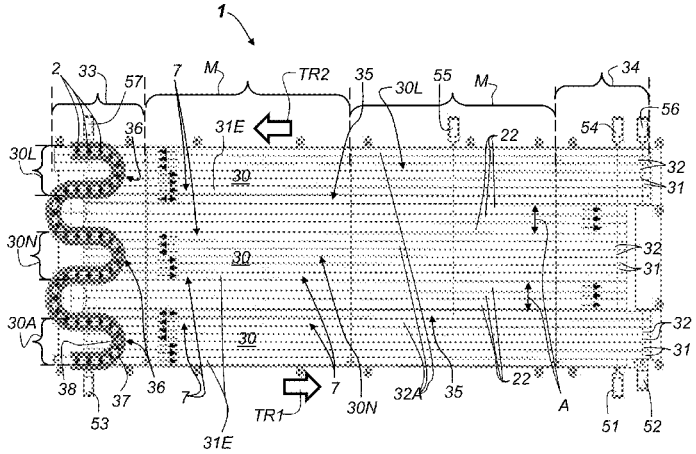

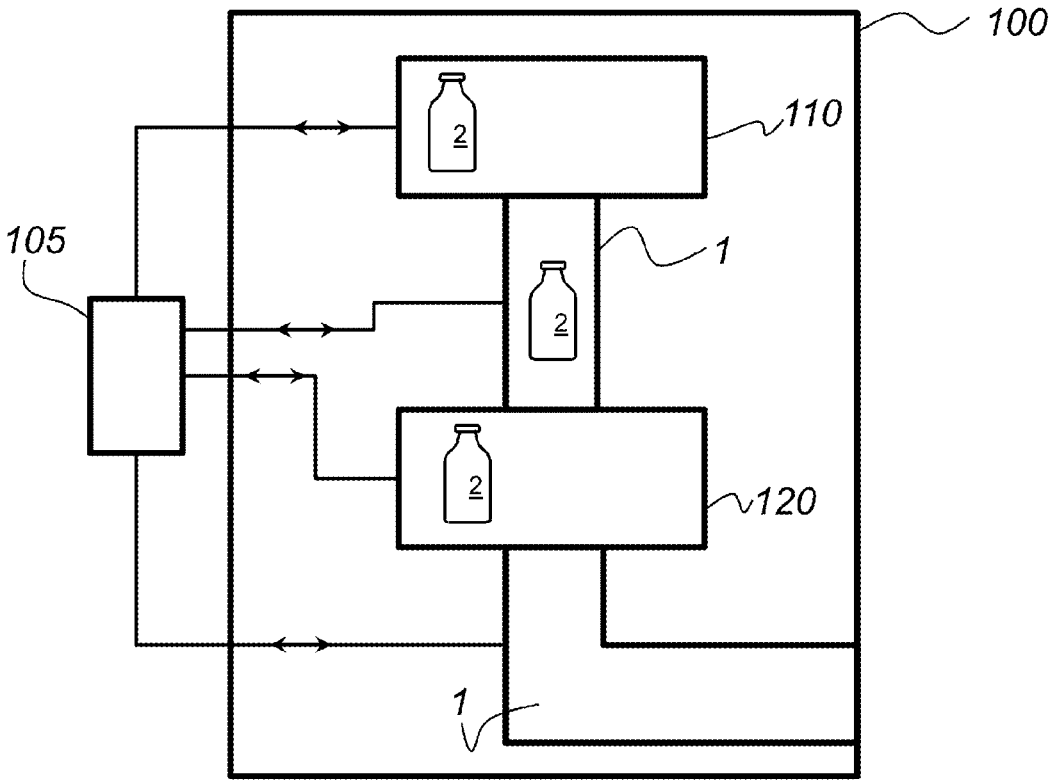

Fig. 1

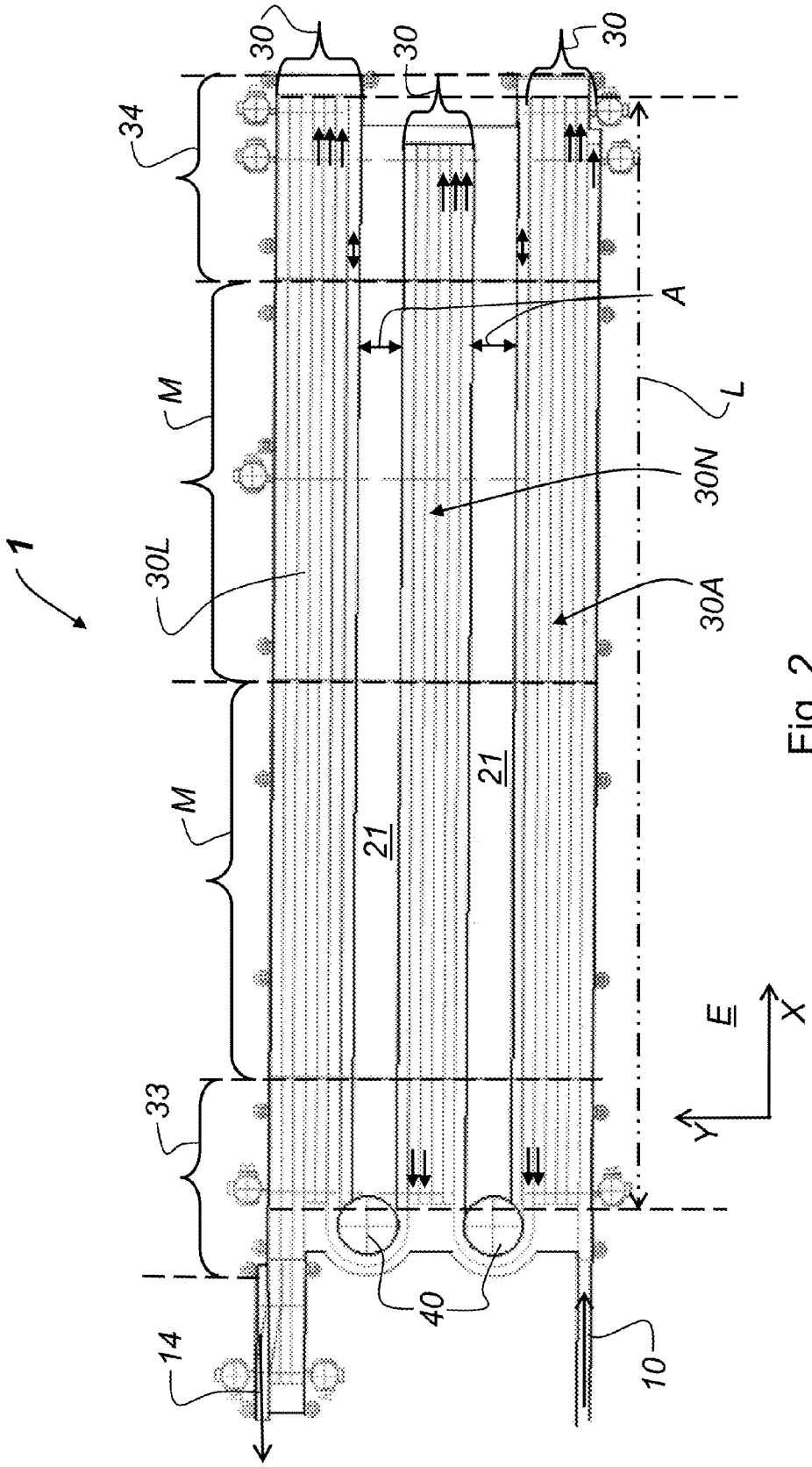

Fig. 2

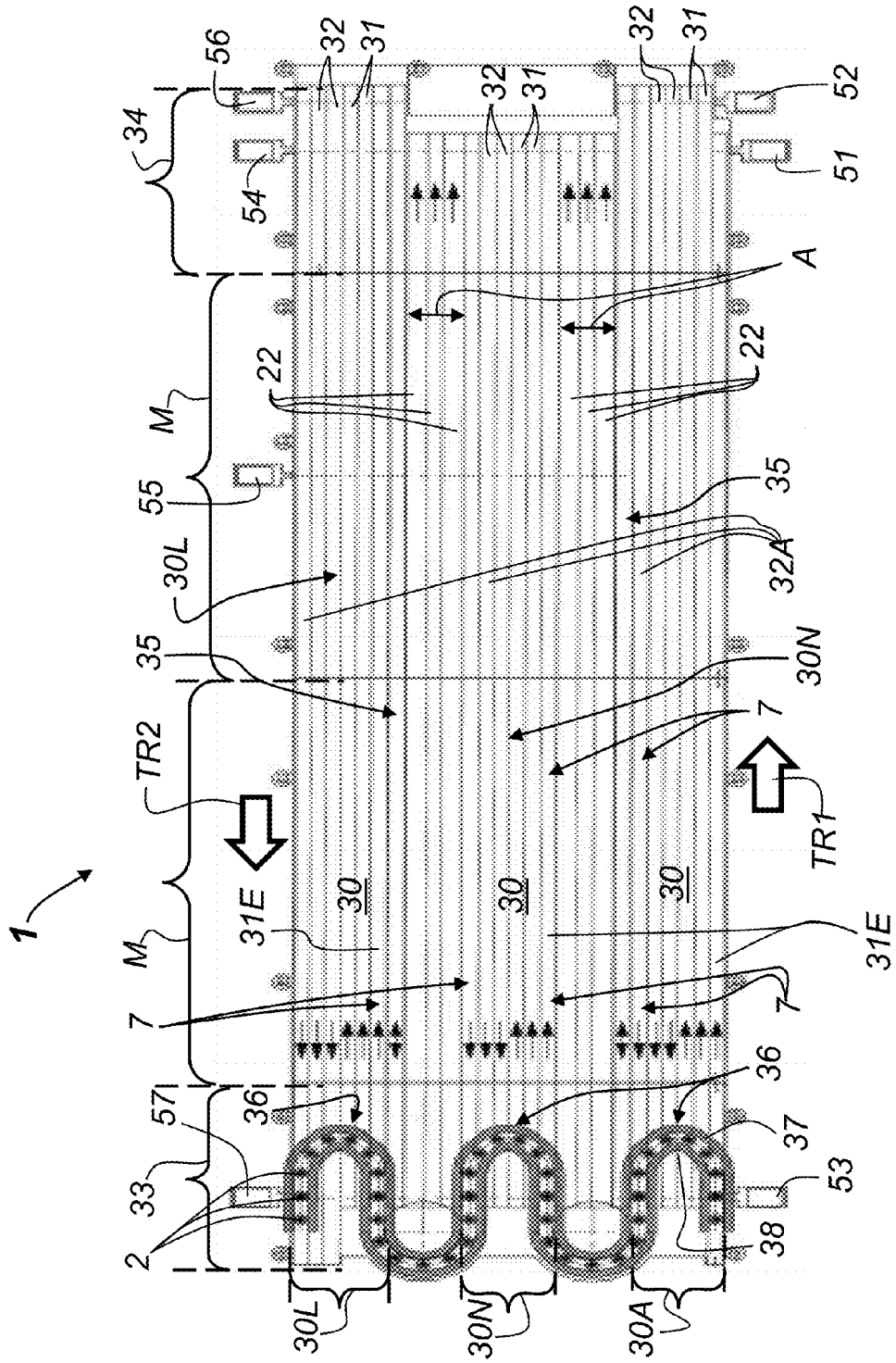
1
2
33
57
36
7
M
31E
30
TR2
35
30L
55
M
22
A
54
34
56
32
31
52
51
53
38
37
30A
30N
30L
7
TR1
30N
32A
35
22
A
31E
7
36
32
31
32
31

Fig. 3

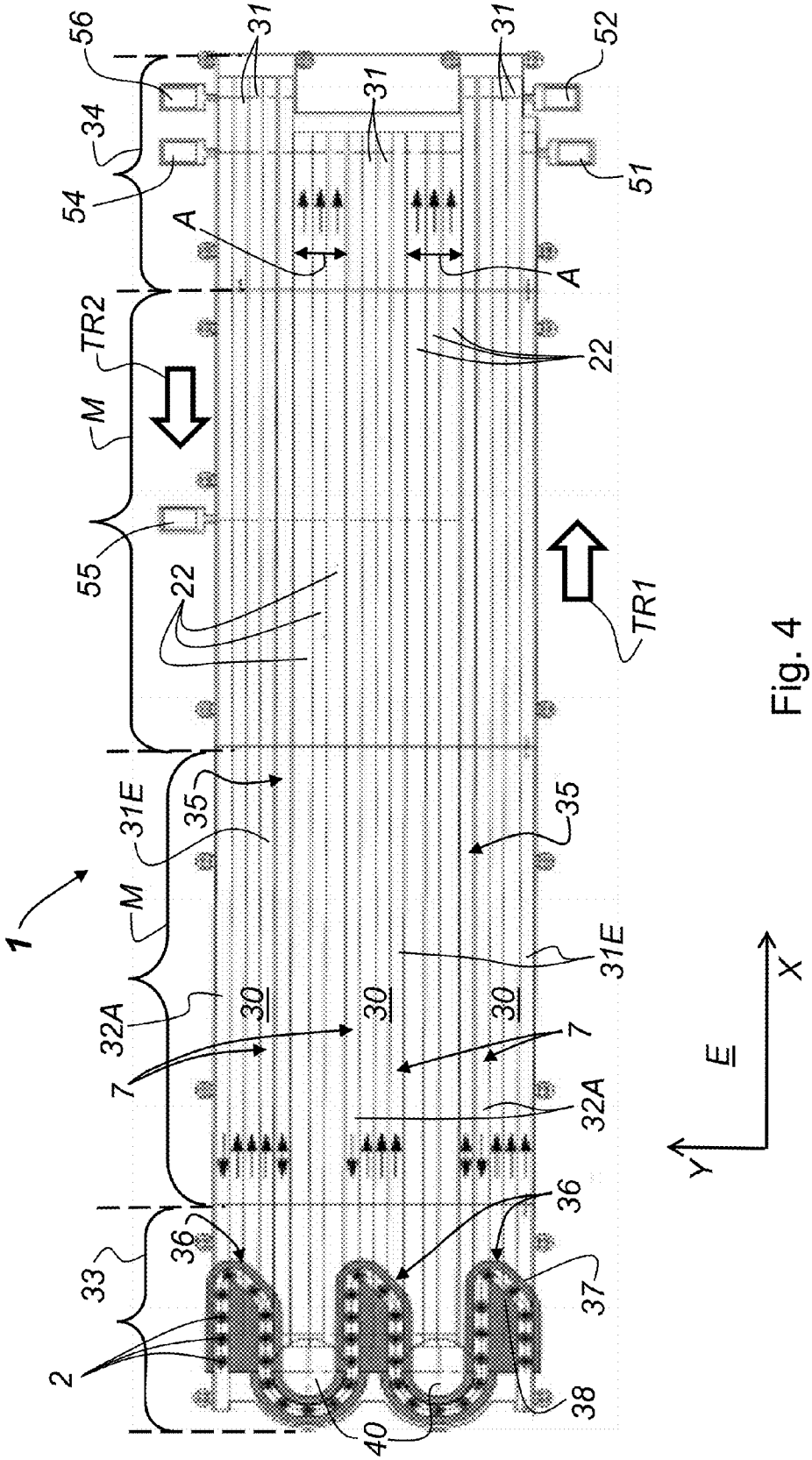
1
2
33
32A
M
31E
55
TR2
M
54
34
56
7
30
35
22
A
31
36
37
38
40
51
52
TR1
E
X
Y

Fig. 4

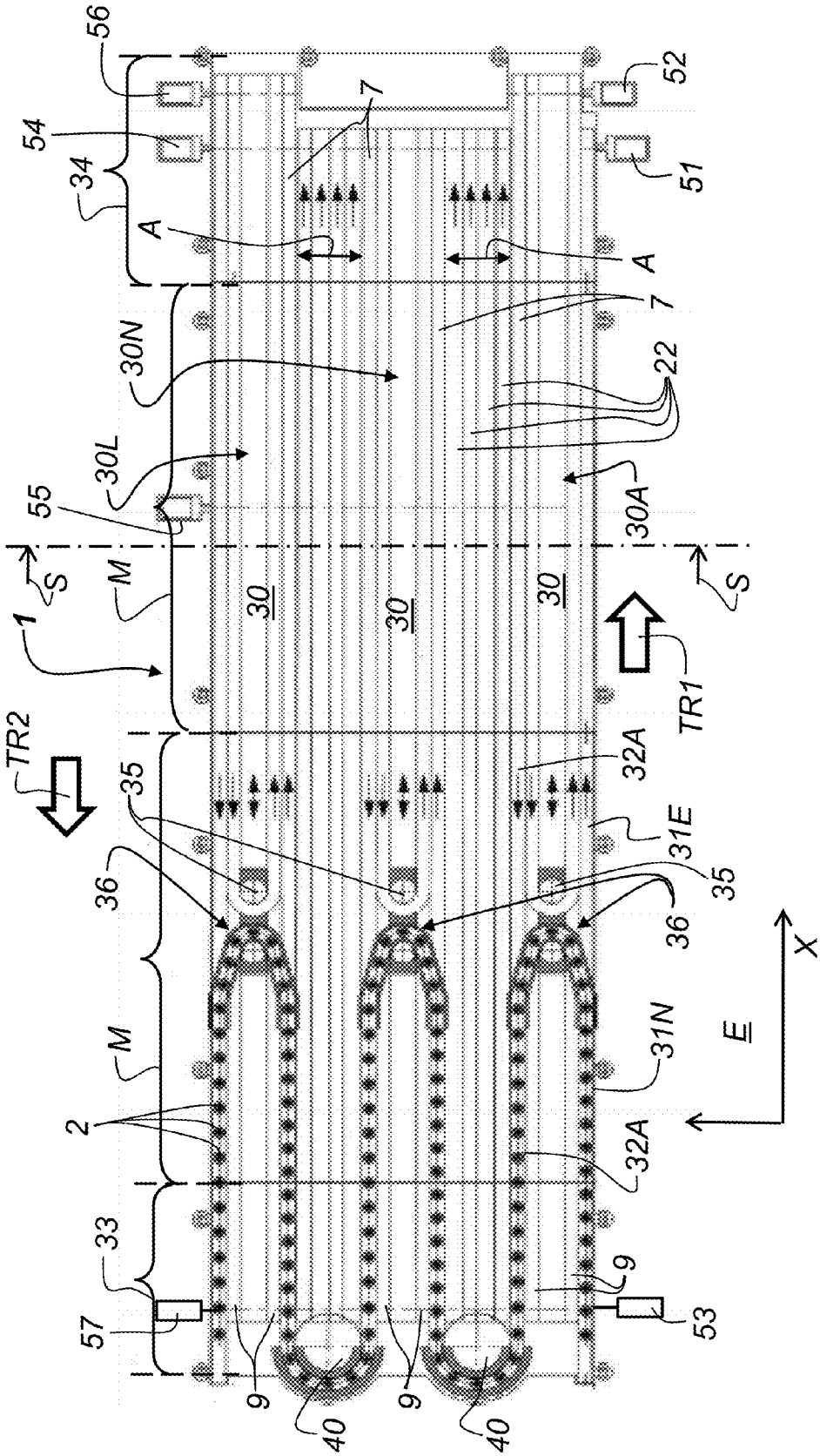
56
54
34
52
51
7
A
A
7
30N
22
30L
55
30A
S
M
S
1
30
30
30
TR1
TR2
35
32A
31E
36
35
36
M
X
E
31N
2
32A
33
9
57
53
9
9
40
40

Fig. 5

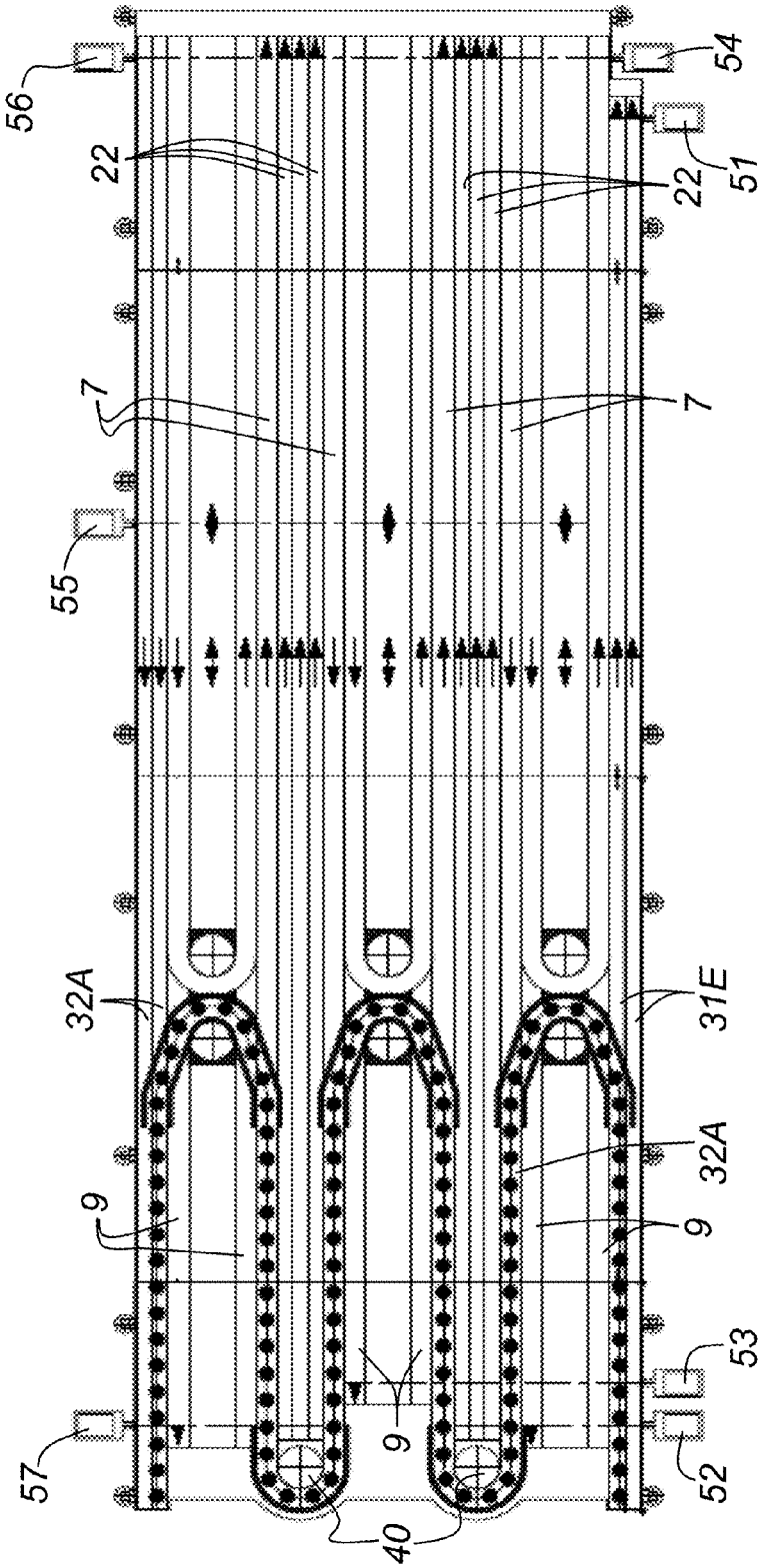

Fig. 5A

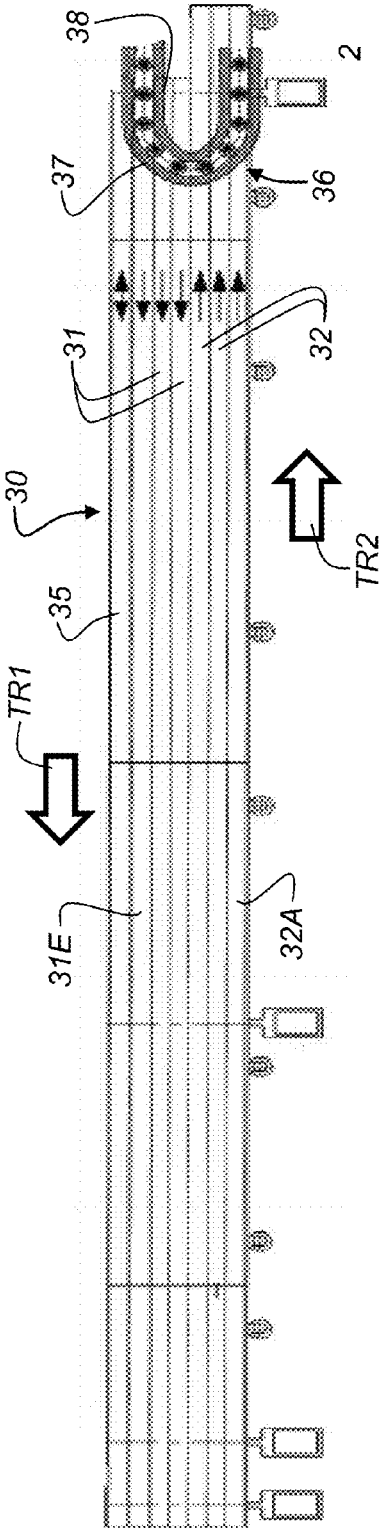
38
2
37
36
31
32
30
TR2
35
TR1
31E
32A

Fig. 6

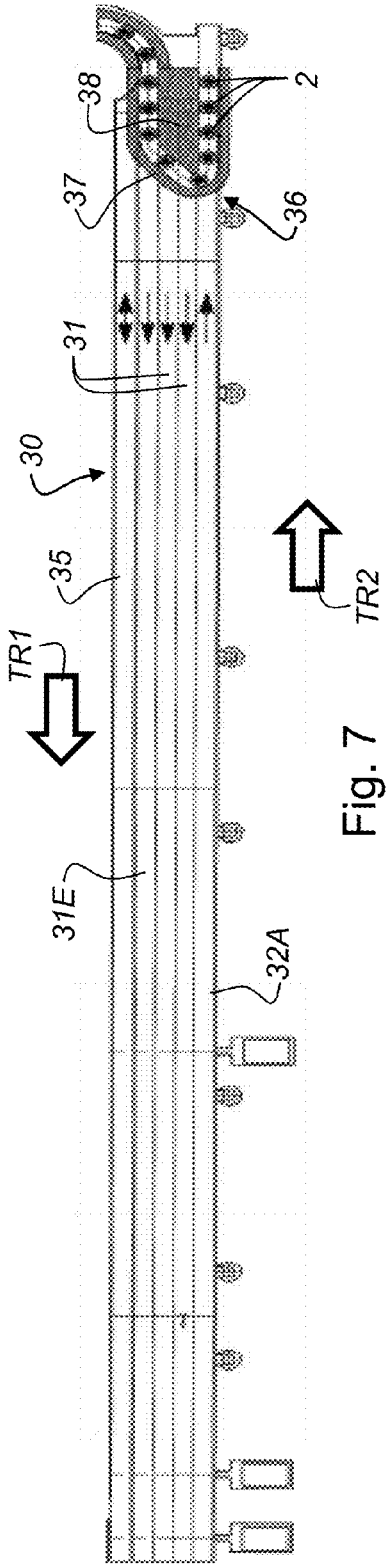
38
2
37
36
31
30
35
TR2
TR1
31E
32A

Fig. 7

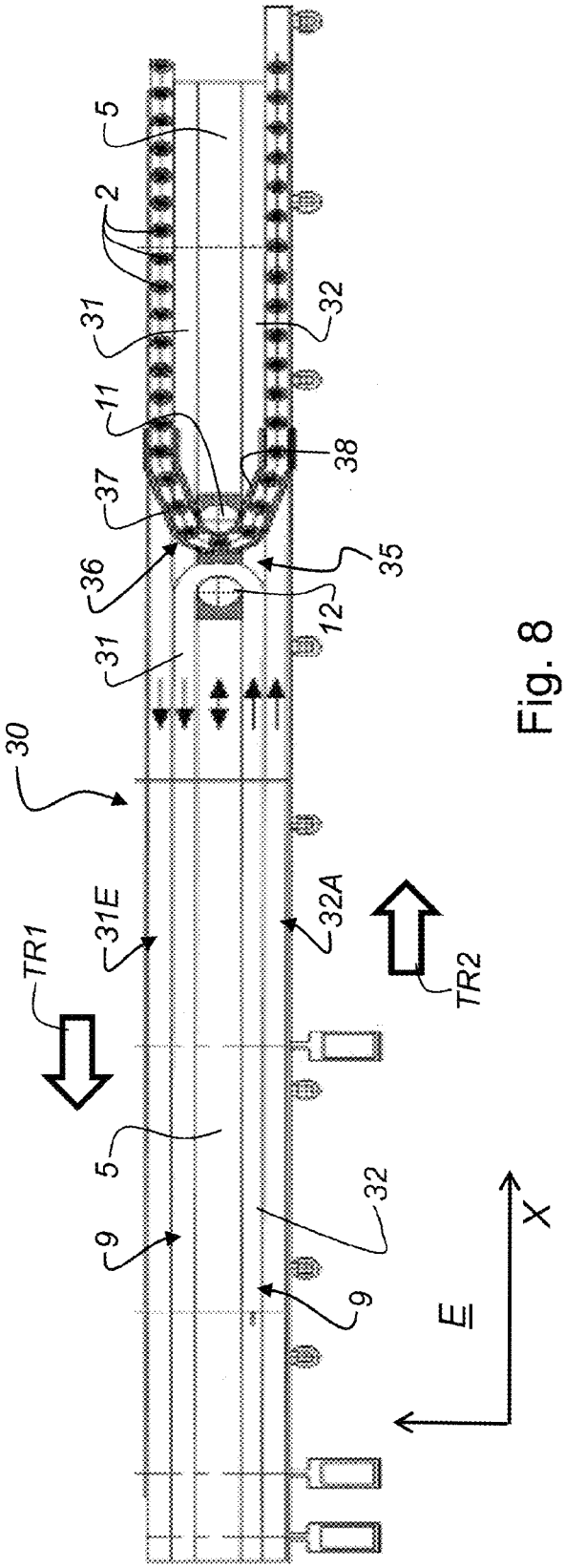

Fig. 8

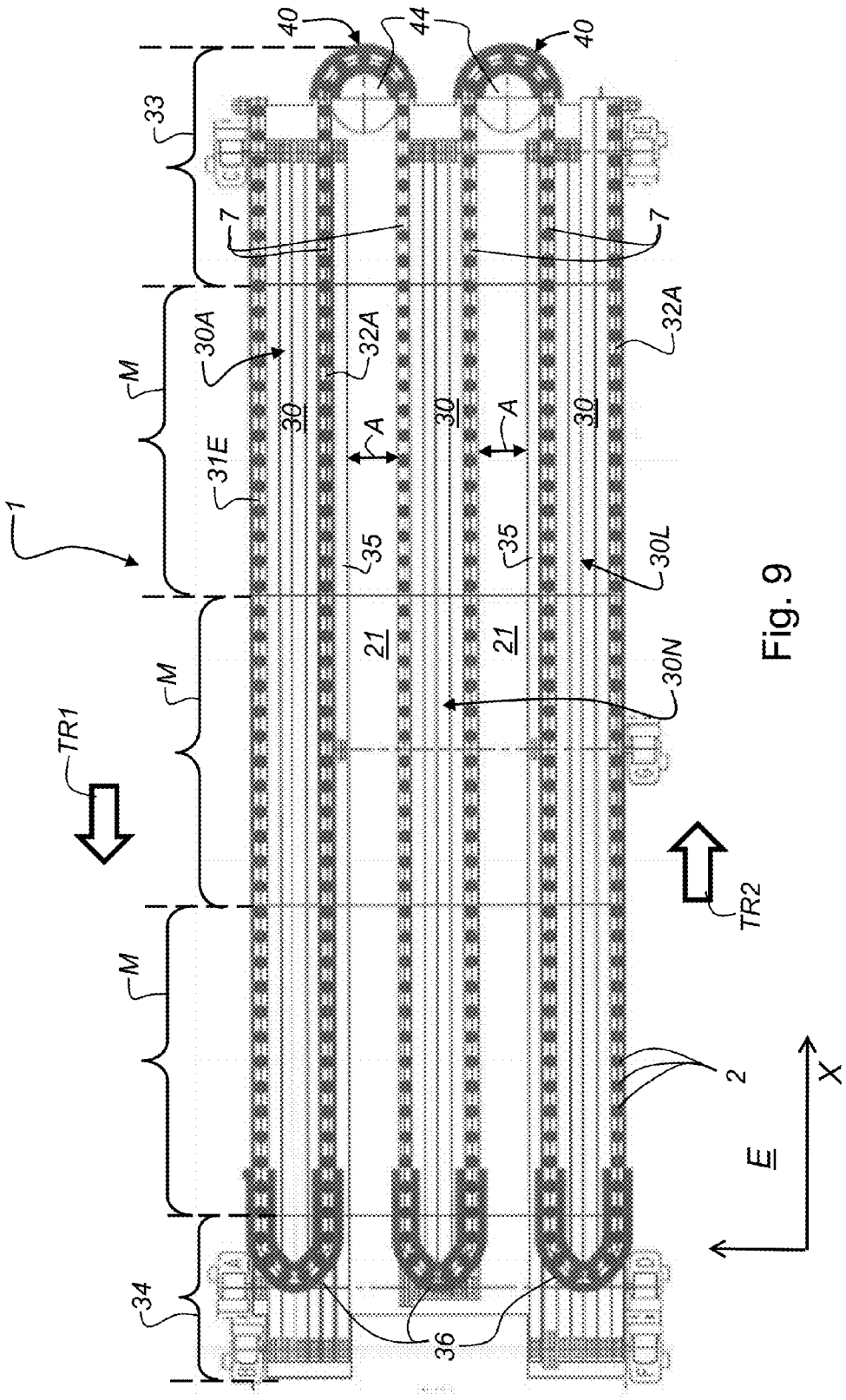
40
44
40
33
7
7
M
30A
32A
32A
30
30
30
A
A
31E
1
35
35
30L
21
21
30N
M
TR1
TR2
M
2
X
E
34
36

Fig. 9

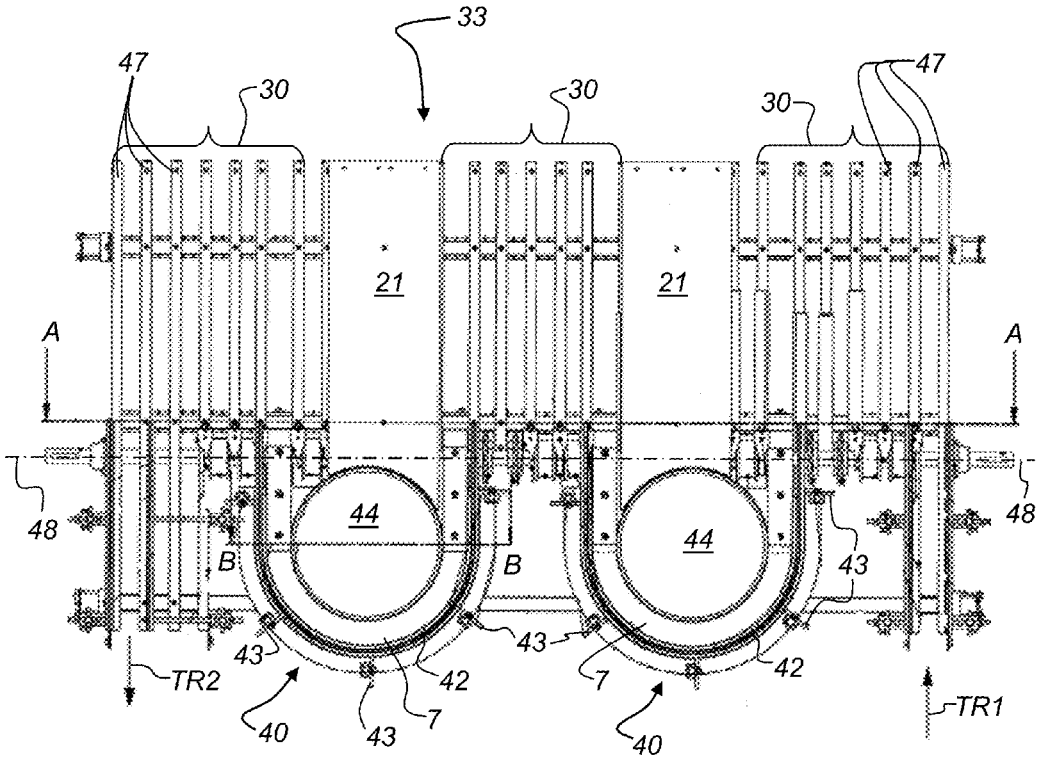
33
47
30
30
30
47
21
21
A
A
48
48
44
44
B
B
43
43
43
42
42
7
7
TR2
TR1
40
40
43

Fig. 10

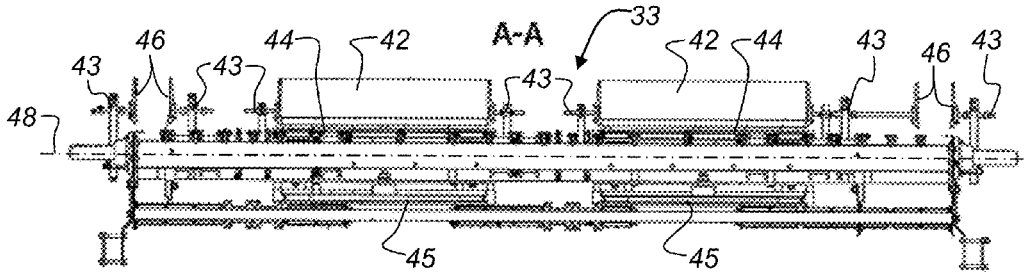
A-A
33
46
44
42
42
44
43
46
43
43
43
43
48
45
45

Fig. 11

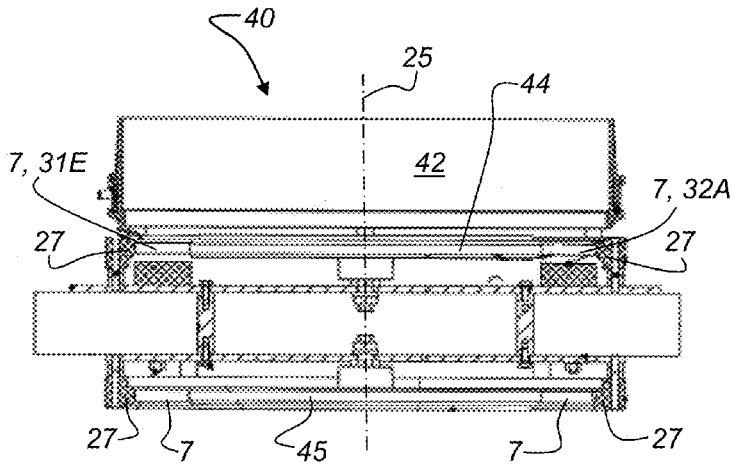
40
25
44
42
7, 31E
7, 32A
27
27
27
7
45
7
27

Fig. 12

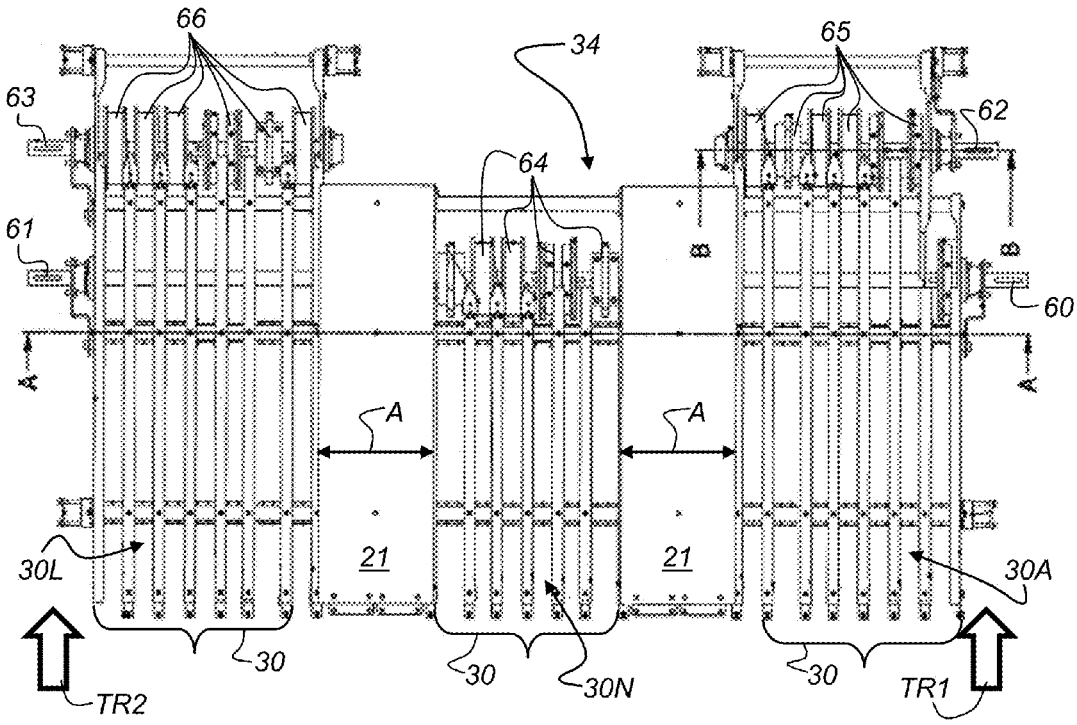
66
34
65
63
62
64
61
B
B
60
A
A
A
A
21
21
30L
30A
30
30
30N
30
TR2
TR1

Fig. 13

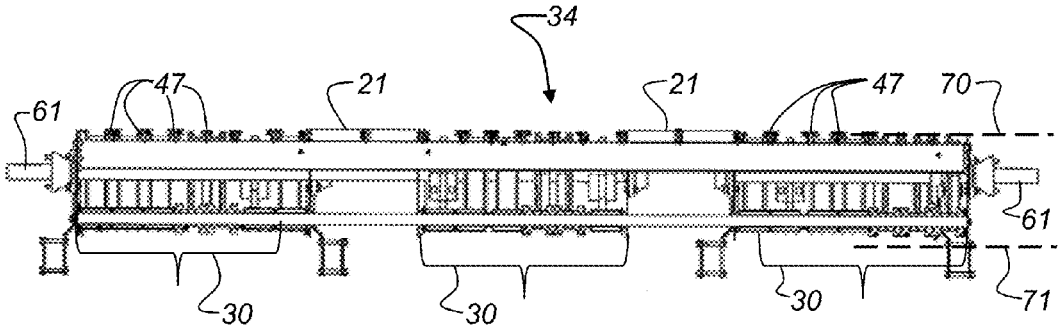

Fig. 14

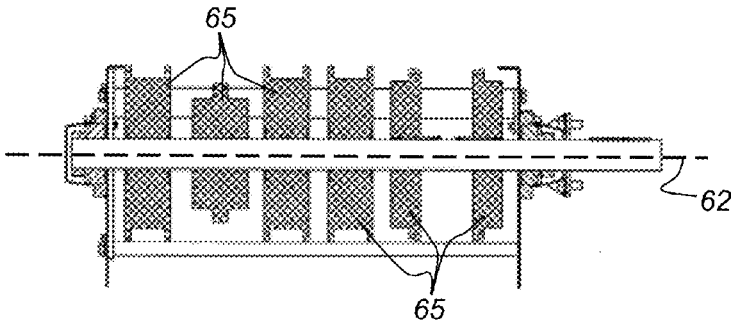

Fig. 15

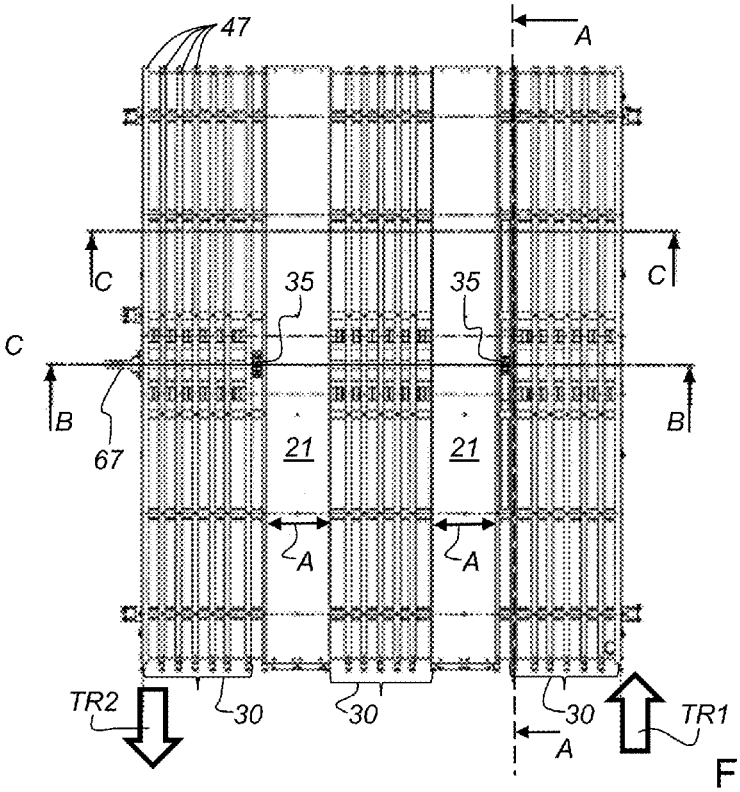
47
A
C
C
35
35
C
B
B
67
21
21
A
A
TR2
30
30
30
TR1
A

Fig. 16

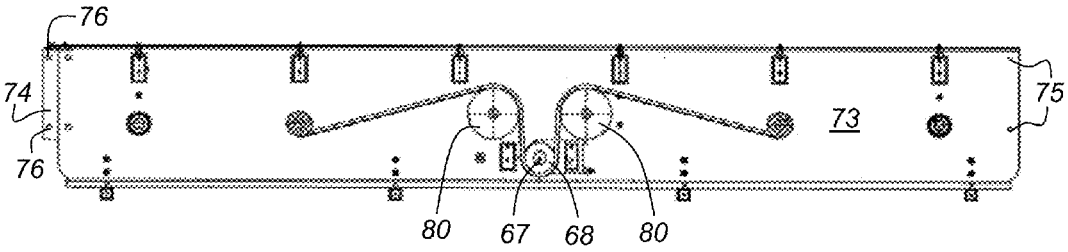
76
74
76
73
75
80
67
68
80

Fig. 17

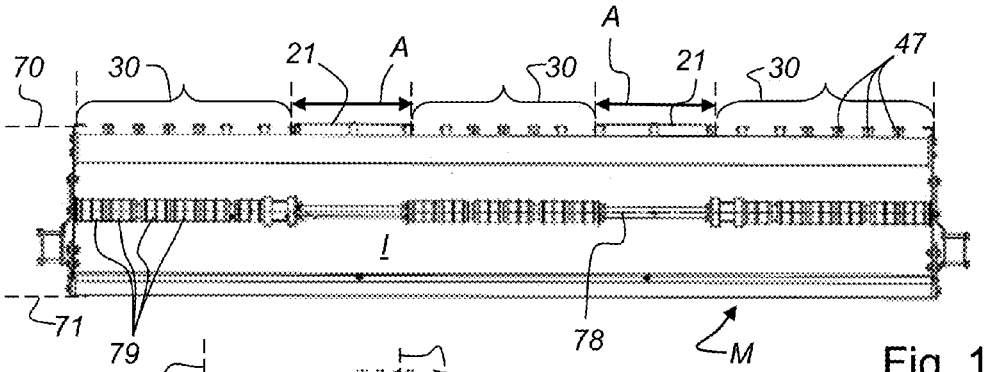

Fig. 18

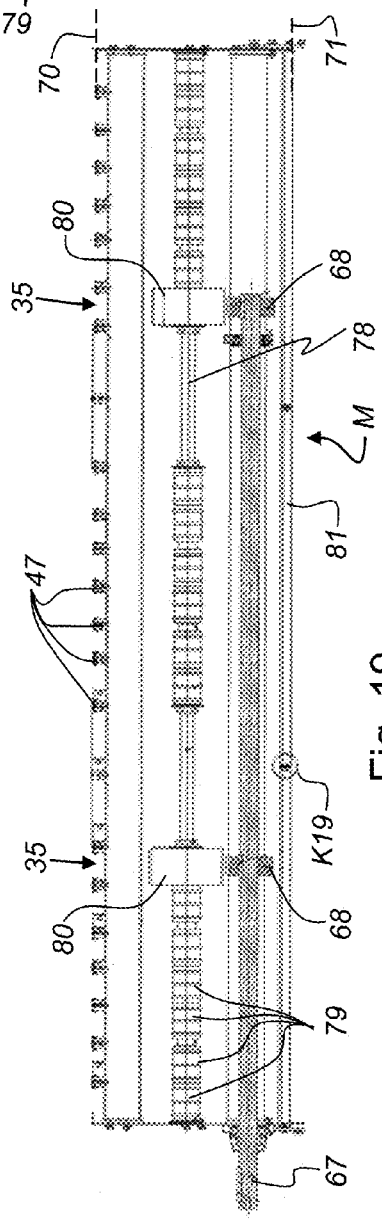

Fig. 19

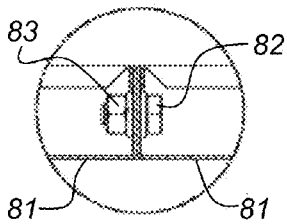

Fig. 20

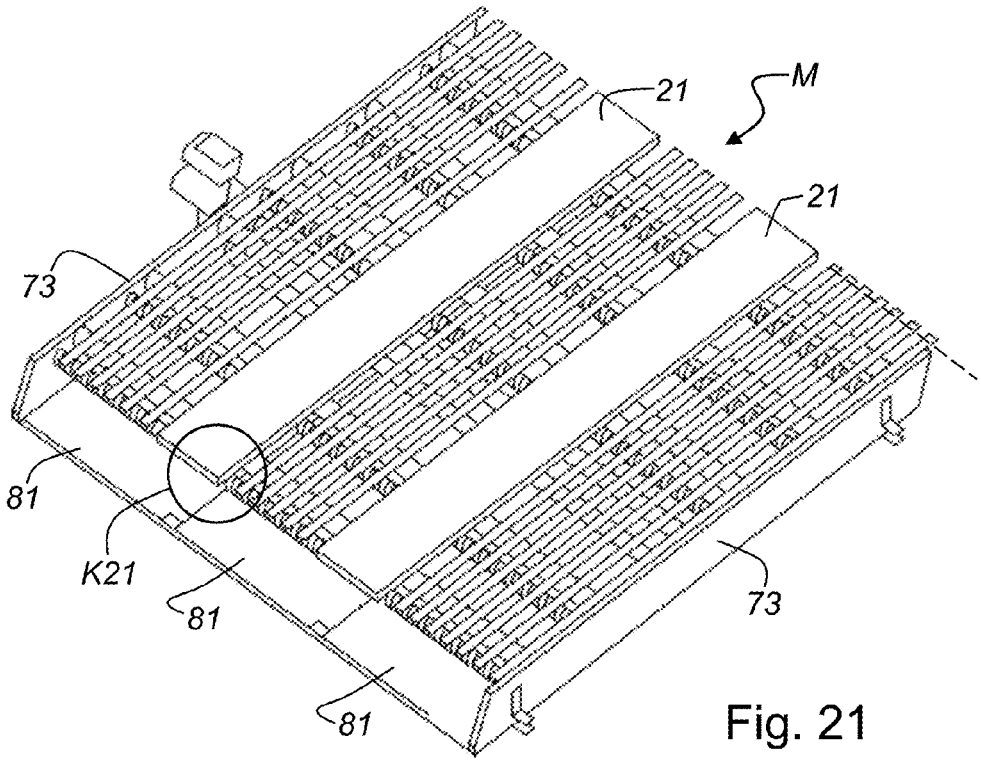

Fig. 21

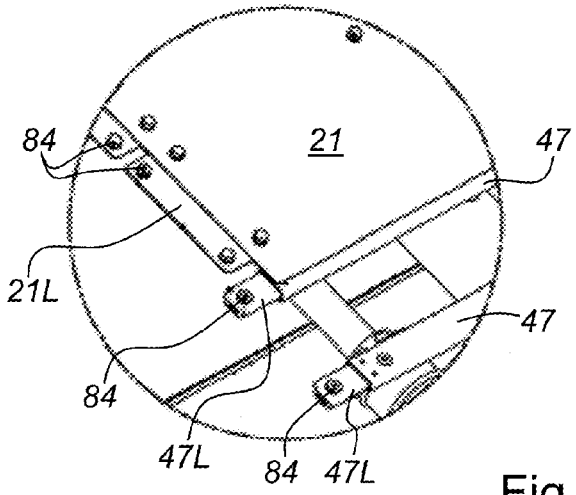

Fig. 22

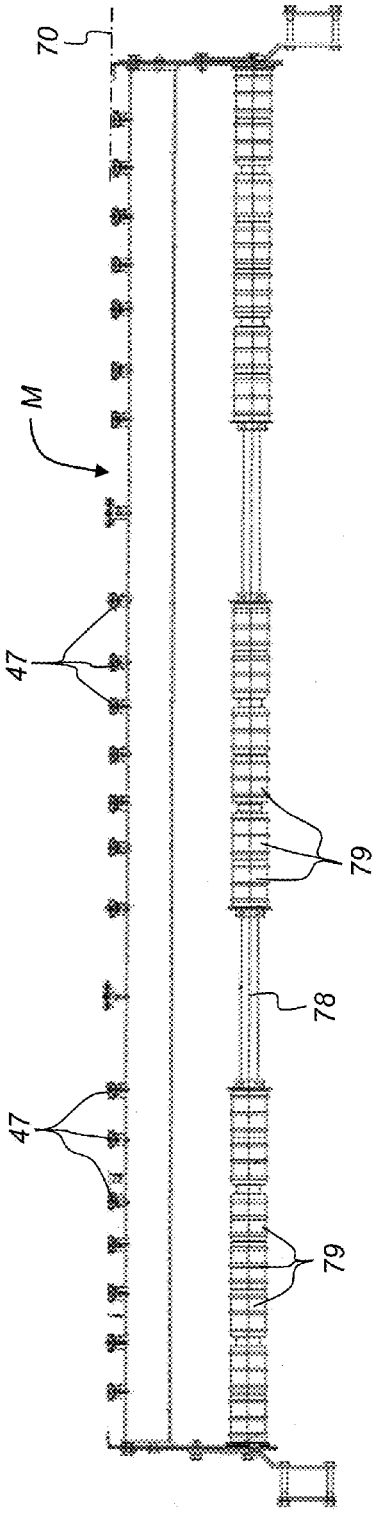

Fig. 24

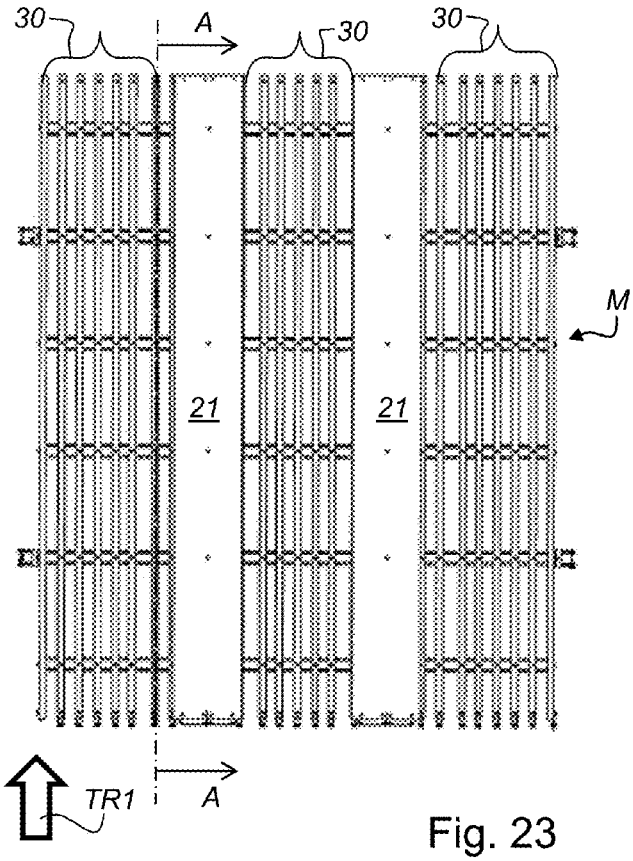

Fig. 23

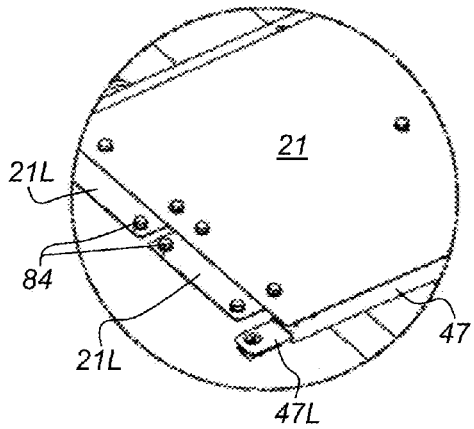

Fig. 27

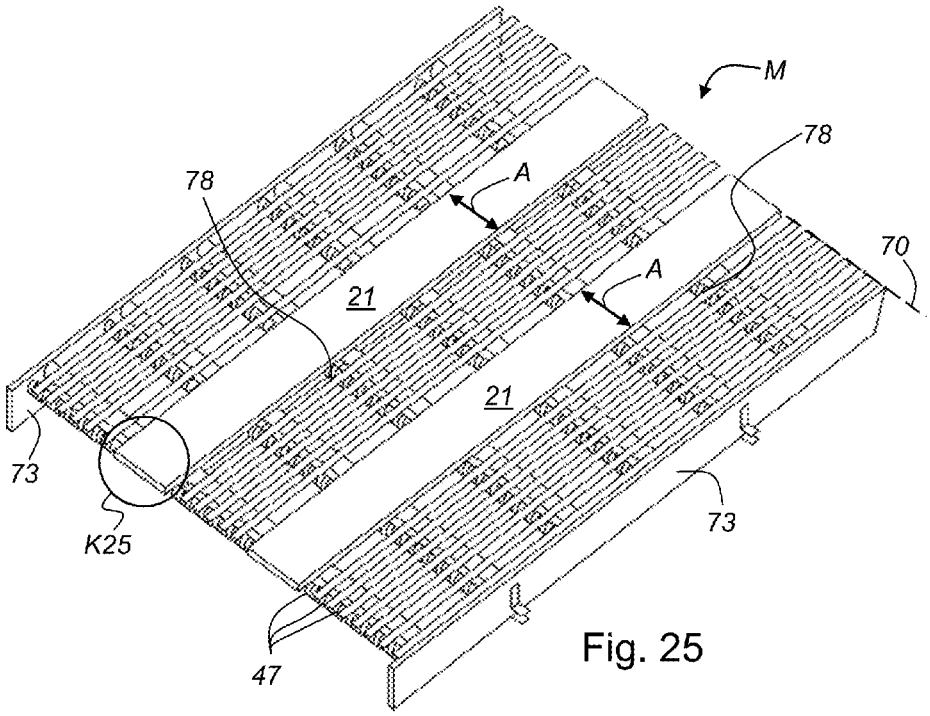

Fig. 25

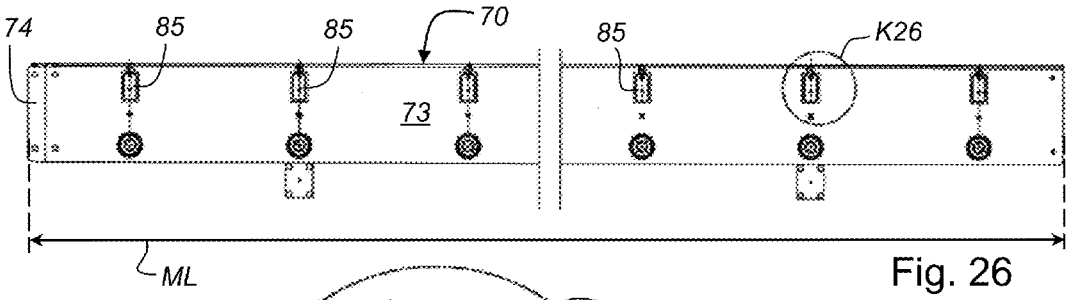

Fig. 26

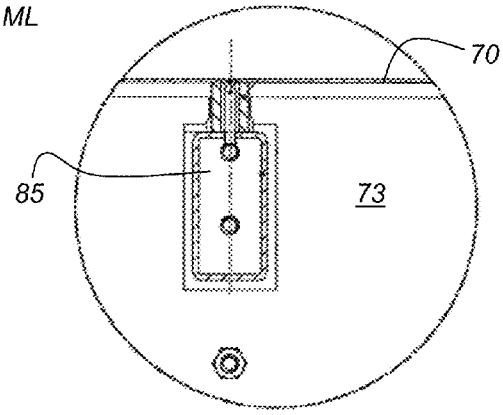

Fig. 28

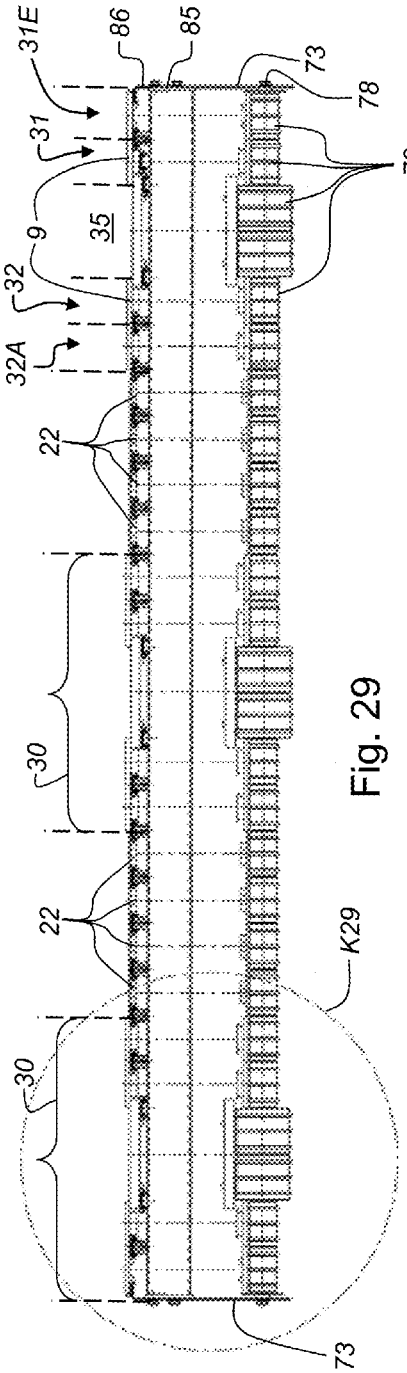
31E
86
85
73
78
31
79
9
35
32
32A
22
30
22
K29
30
73

Fig. 29

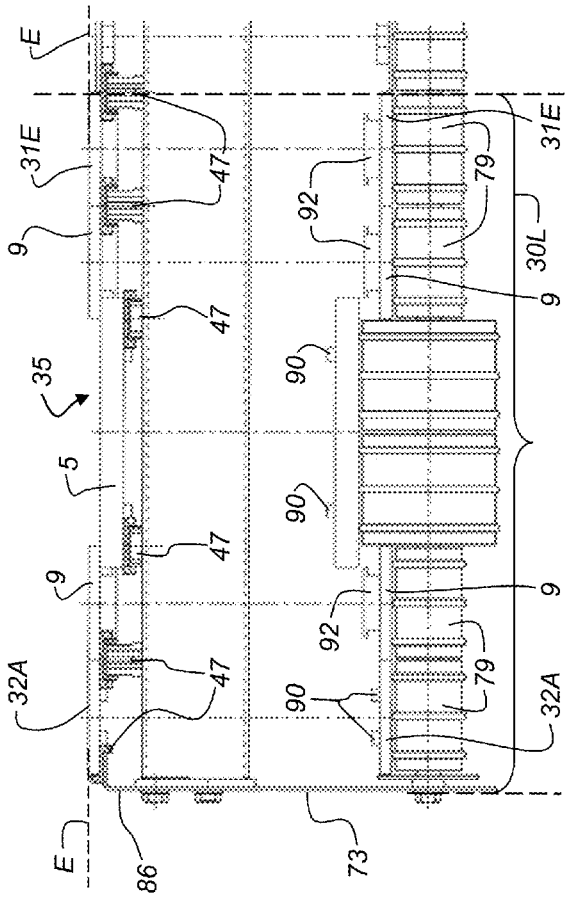
E
31E
47
9
47
35
5
47
9
32A
47
E
86
92
79
31E
30L
9
90
90
9
92
79
90
32A
73

Fig. 30

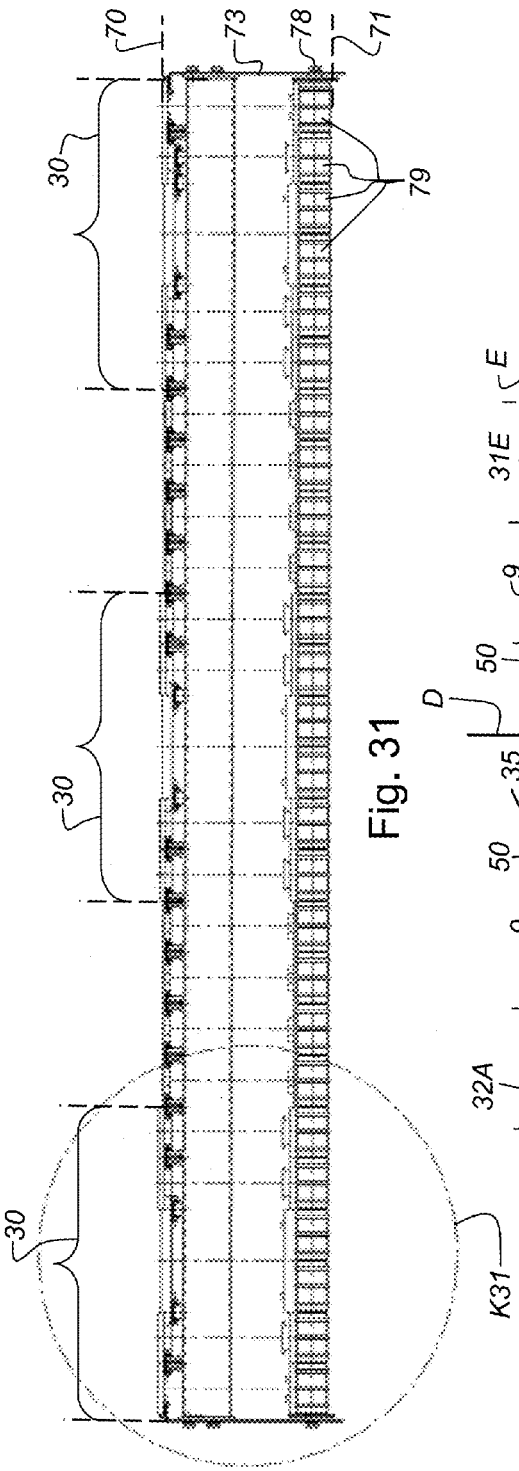
70
73
78
71
30
79
30
30
K31

Fig. 31

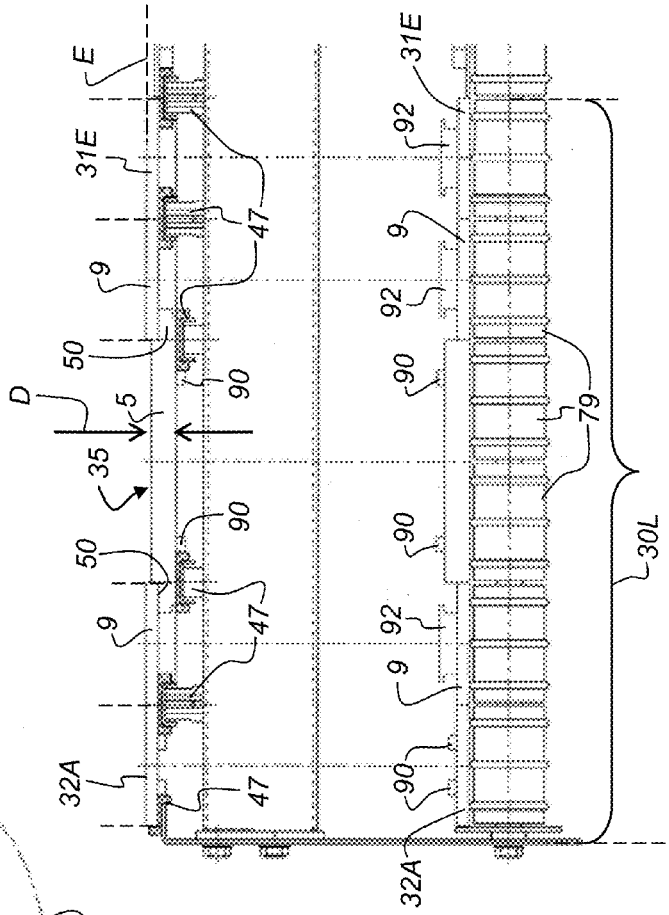
E
31E
47
9
50
90
D
5
35
50
90
9
47
32A
47
31E
92
9
92
90
79
90
92
9
90
32A
30L

Fig. 32

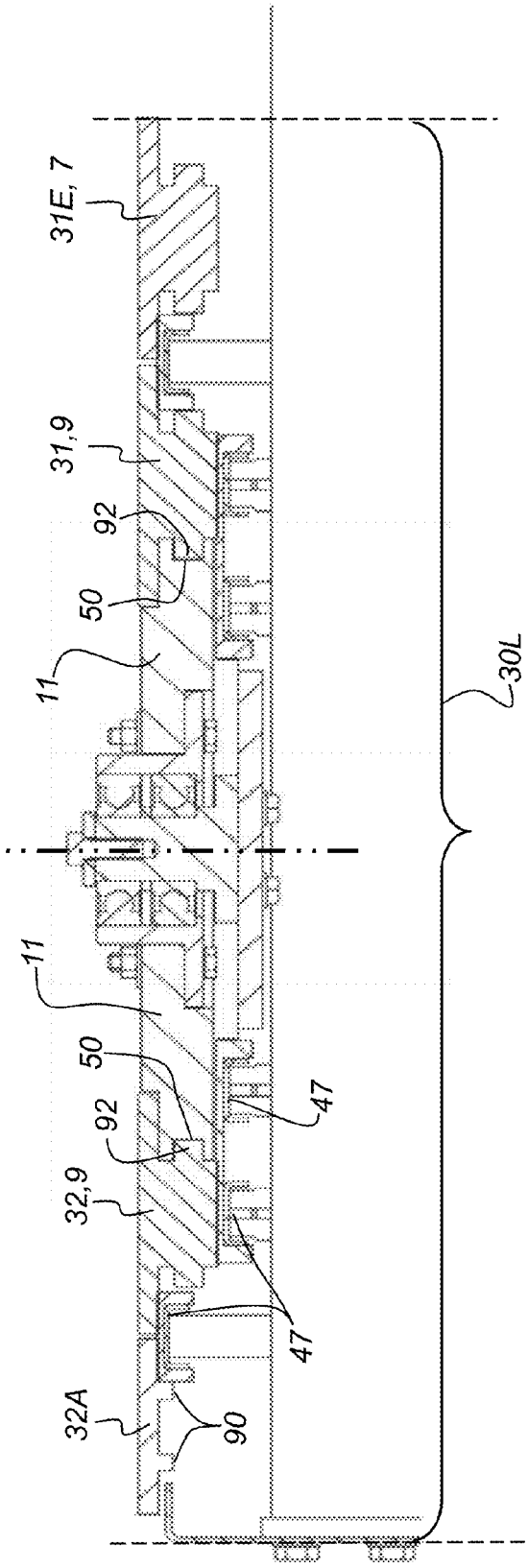

Fig. 32A

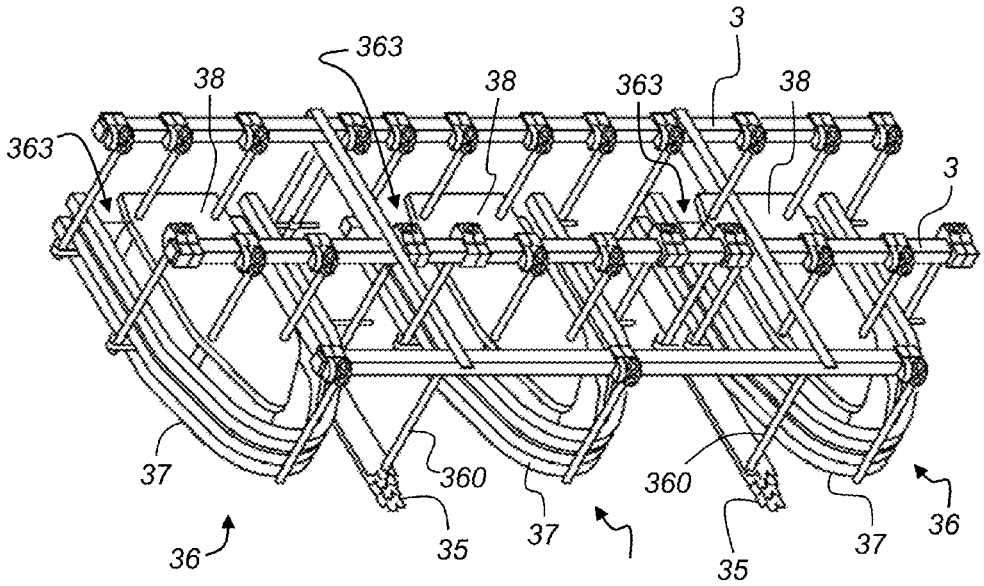
3
363
38
38
363
38
363
3
37
360
360
36
36
35
37
35
37

Fig. 33

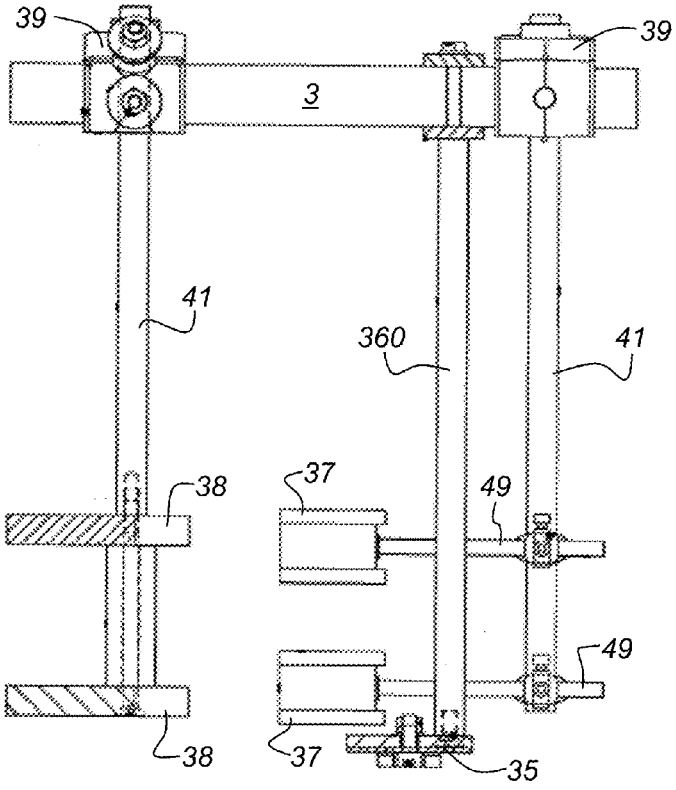
39
39
3
41
360
41
38
37
49
49
38
37
35

Fig. 36

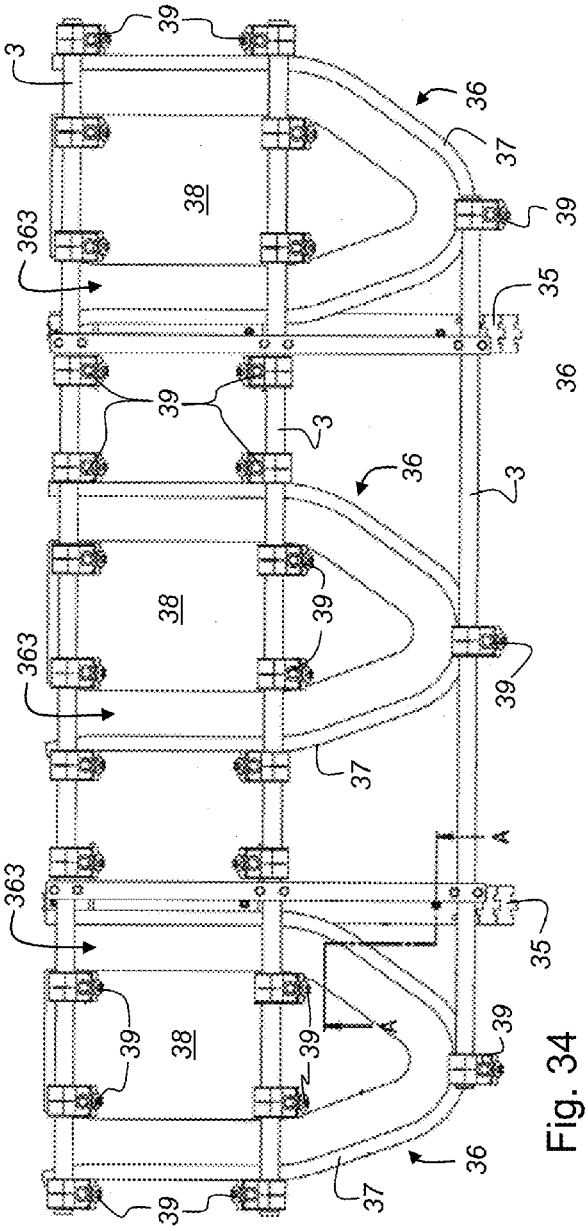

Fig. 34

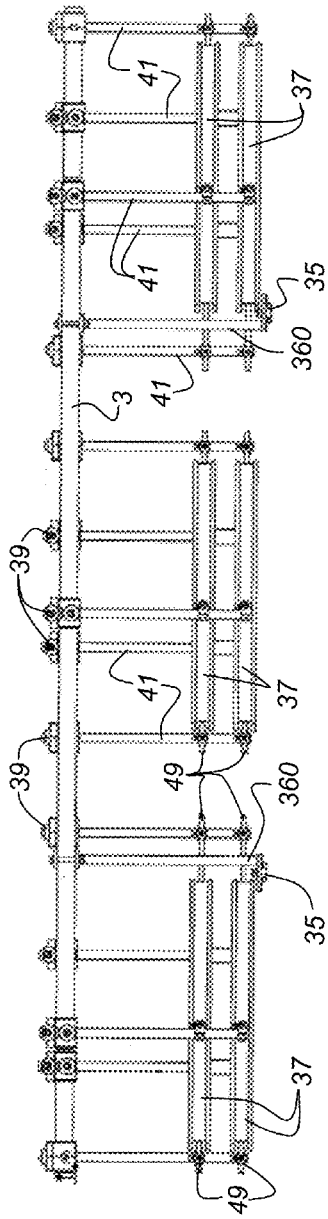

Fig. 35

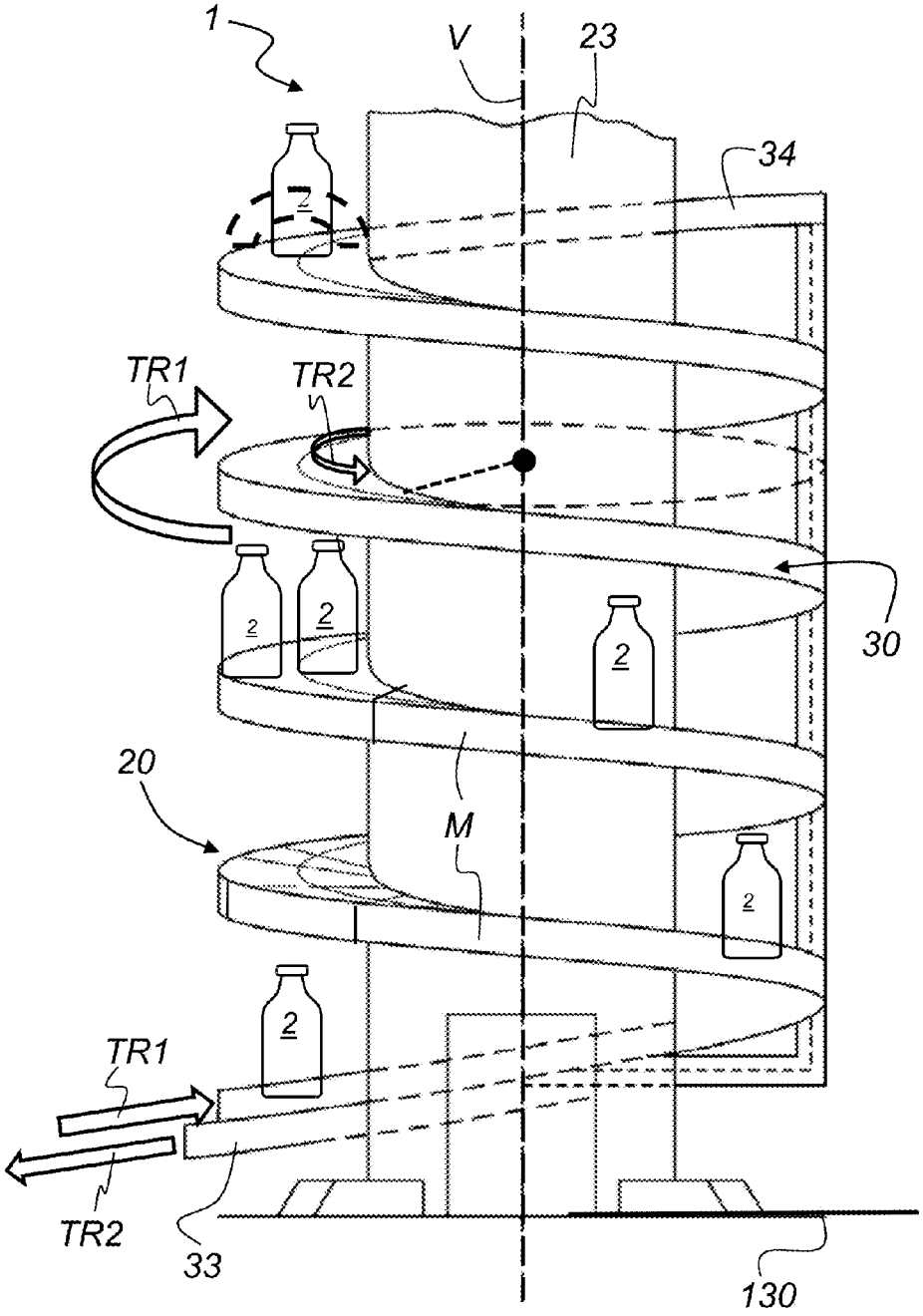

Fig. 37

BUFFER MEANS FOR CONTAINERS AND METHOD FOR BUFFERING CONTAINERS

CROSS REFERENCE TO RELATED APPLICATIONS

This patent application claims the benefit of German Patent Application No. 10 2010 036 771.0, filed on Jul. 30, 2010 and German Patent Application No. 10 2011 001 532.9, filed on Mar. 24, 2011, both of which are hereby incorporated by reference.

FIELD OF THE INVENTION

The present invention relates to a buffer means for containers operating according to the first in-first out (FIFO) principle. The containers may be cans or bottles (glass bottles or plastic bottles).

In particular the invention relates to a buffer means for containers, wherein at least one infeed conveyor track is drivable along an infeed direction. The buffer means comprises at least one outlet conveyor track, drivable along an outlet direction. The at least one infeed conveyor track and the at least one outlet conveyor track are arranged parallel to each other and form a buffer module of the buffer means. The buffer module has a width and has the infeed conveyor track formed at a first edge and the outlet conveyor track formed at a second edge. Furthermore, a transfer device is provided, exhibiting at least an outer guide. By means of the outer guide the containers can be transferred from the infeed conveyor track to the outlet conveyor track of the buffer module. By means of the sliding device the transfer device can be displaced in parallel along the infeed conveyor track or the outlet conveyor track, respectively, depending on the required buffer capacity in the buffer means.

Furthermore, the invention relates to a method for buffering containers according to the FIFO principle.

BACKGROUND OF THE INVENTION

A container handling apparatus usually comprises plural container handling units, which are arranged one after the other. Container handling units, for example, may be stretch-blow machines for manufacturing plastic containers (plastic bottles) from preforms. Furthermore, it is possible that the container handling unit is a labeling machine for labeling the containers. A further possibility of the container handling unit is a cleaning unit for cleaning the containers. To this is added a filling unit for filling the containers with a liquid or any other content, respectively. Eventually, a packaging unit for packaging or combining the containers to packs follows. Between the individual container handling units of a container handling apparatus plural transport means are provided. If a fault occurs at one of the container handling units, for example the labeling machine, the containers need to be buffered within the process. Through the buffering it is achieved that the container handling units upstream of the labeling unit can continue their operation, in order to transfer the containers only into the buffer of the transport means for buffering there, before supplying them to the labeling unit. Independently of the occurrence of a fault in a container handling apparatus it is also necessary to feed the containers to the individual container handling units of a container handling apparatus according to the step frequency of processing the containers in the individual container handling units. Therefore, it is necessary that the transport means, (buffer means) provided between the individual container handling units, can vary the

buffering capacity depending on the required step frequency of the individual container handling units.

Canadian patent application CA 2 364 216 A1 discloses a transport system for the dynamical buffering of articles. The length of the transport system can be variably set, so that a certain number of containers can be buffered in the transport system. Thereunto a linear transport chain for transporting articles into the transport system and a second linear transport chain for transporting articles out of the transport system are provided. Between the first and the second linear transport chain plural U-shaped transport chains are provided, all of which are driven by one motor and thus are running at equal speeds. The bottom of the 'U' of each of these U-shaped transport chains is arranged at the side of the infeed of the containers into the transport system. The opening of the 'U' of each of these U-shaped transport chains is arranged at the side of the transport system opposite the infeed. The legs of the 'U' of the U-shaped transport chain are arranged parallel to the first and the second linear transport chain. Over the transport chains a transfer trolley is provided, which is displaceable along the transport chains. The transfer trolley exhibits a number of transfer discs equal to the number of U-shaped transport chains in the transport system. The transfer discs are positioned between linear transport segments of the transport chains. When articles reach one of the transfer discs of the transfer trolley from a transport chain, they are transferred to the next transport chain by the transport disc. The transport system is configured in such a way that linear transport segments, arranged parallel to each other, of all transport chains transport articles in opposite directions. Thus, the articles are transported back and forth in the transport system. By displacing the transfer system, moreover, the number of articles in the transport system, and thus the number of articles buffered there, can be set.

In the transport system described in CA 2 364 216 A1 all U-shaped chains have the same velocity. During the transfer of the containers from a transport chain to the transfer discs of the transfer trolley the containers are exposed to the risk of being damaged by collisions. Furthermore, there is the danger of a hand of a user getting between the transport chains during operation of the transport system or during maintenance work.

The company Nercon Eng. & Mfg., Inc., Oshkosh, Wis., USA, in U.S. Pat. No. 5,685,414, has described an endless transport system, in which the containers transported are not exposed to pressure from preceding containers. Furthermore, this company has developed a further transport system called "Flex Flow Accumulator", in which the containers transported are exposed only to little pressure from preceding containers, and which, moreover, similar to the transport system of CA 2 364 216 A1, offers the possibility of buffering containers within the transport system. Therein also the number of containers that can be buffered in the transport system can be varied. Unlike CA 2 364 216 A1 a continuous chain is used for transporting the containers in the Flex Flow Accumulator. In this way it is intended to assure that there is no back pressure from the production line.

In the Flex Flow Accumulator by the company Nercon the containers therefore are on one transport chain during the entire transport. Therefore, on the one hand, all containers in the Flex Flow Accumulator are transported with an equal velocity. On the other hand with this construction the transport chain needs to be dimensioned relatively large, and thus is heavy. As such chains become more expensive with increasing dimensions, and because a heavy chain requires a greater driving force, the Flex Flow Accumulator by the com-

pany Nercon is relatively expensive with respect to production costs as well as operational costs.

SUMMARY OF THE INVENTION

It therefore is an object of the invention to provide a buffering means for containers, which is variable, and avoids damaging the transported containers, and overcomes the problems of prior art.

The object is achieved by a buffering means for containers operating according to the first in-first out principle, comprising:

- at least one infeed conveyor track drivable along an infeed direction;
- at least one outlet conveyor track drivable along an outlet direction;
- a buffer module formed by the at least one infeed conveyor track and the at least one outlet conveyor track which are arranged parallel to each other and having a width;
- a first edge, at the infeed conveyor track of the buffer module for the containers;
- a second edge, at the outlet conveyor track for the containers;
- a transfer device with an outer guide, so that the containers are transferrable from the infeed conveyor track to the outlet conveyor track of the buffer module;
- a sliding device for sliding the transfer device in parallel along the infeed conveyor track or the outlet conveyor track, respectively, depending on a required buffer capacity in the buffer means; and
- at least one further drivable transfer conveyor arranged between the infeed conveyor track and the outlet conveyor track of the buffer module in such a way that it is parallel to the buffer module.

A further object of the invention is to provide a method for buffering containers, by which damaging the containers is avoided and which overcomes the problems of prior art.

This object is achieved by a method for buffering containers according to the first in-first out principle, comprising the steps:

- supplying containers from a first container handling unit to an infeed conveyor track of a buffer means;
- transferring the containers by means of a transfer device, which exhibits an inner guide and/or an outer guide, from the infeed conveyor track to an outlet conveyor track of the buffer means, wherein during transfer from the infeed conveyor track to the outlet conveyor track the containers are conducted via at least one further drivable transfer conveyor, which is arranged parallel to and between the infeed conveyor track and the outlet conveyor track essentially along an entire length of the buffer module;
- determining a required buffer capacity by means of a control unit of the container handling apparatus; and,
- moving a sliding device together with the transfer device in parallel along the infeed conveyor track and the outlet conveyor track, respectively, in dependence on the required buffer capacity.

An advantageous embodiment of the buffer means for containers operating according to the first in-first out principle, comprises:

- at least one infeed conveyor track drivable along an infeed direction;
- at least one outlet conveyor track drivable along an outlet direction;
- three buffer modules, which are arranged parallel to each other, wherein each buffer module is formed by the at least one infeed conveyor track and the at least one outlet conveyor track which are arranged parallel to each other and having a width;
- a first edge, at the infeed conveyor track of the buffer module for the containers;
- a second edge, at the outlet conveyor track for the containers;
- a transfer device with an outer guide, so that the containers are transferrable from the infeed conveyor track to the outlet conveyor track of the buffer module;
- a sliding device for sliding the transfer device in parallel along the infeed conveyor track or the outlet conveyor track, respectively, depending on a required buffer capacity in the buffer means;
- at least one further drivable transfer conveyor arranged between the infeed conveyor track and the outlet conveyor track of the buffer module in such a way that it is parallel to the buffer module; and,
- a transfer means is arranged between an initial buffer module and a subsequent intermediate buffer module, a transfer between the intermediate buffer module and a last buffer module, wherein the initial buffer module, the intermediate buffer module and the last buffer module are arranged parallel to each other and the transfer means has an endless chain with an upper redirection and a lower redirection provided at a front module, which is arranged in such a way in the buffer means that the endless chain forms the outlet conveyor track of the initial buffer module and the infeed conveyor track of the intermediate buffer module and that the outlet conveyor track of the intermediate buffer module forms the infeed conveyor track of the last buffer module.

The invention discloses a buffer means for containers, wherein the buffer means operates according to the FIFO principle. Put differently, this means that the container which is supplied to the buffer means first, is again taken from the buffer means first and transferred to a container handling unit. To this end the buffer means has at least a first conveyor track drivable along an infeed transport direction. Furthermore, the means has at least a second conveyor track, drivable along an outlet transport direction. The at least one conveyor track and the at least one second conveyor track are arranged parallel to each other and thus form a buffer module of the buffer means. The buffer module has a width and at a first edge exhibits an infeed conveyor track of the buffer module for the containers. At a second edge of the buffer module an outlet conveyor track for the containers is provided. A transfer device exhibiting an inner guide and an outer guide is configured in such a way that the containers are transferrable from the infeed conveyor track to the outlet conveyor track of the buffer module.

Furthermore, a sliding device is provided, by means of which the transfer device is displaceable in parallel along the infeed conveyor track or the outlet conveyor track, respectively, depending on the required buffer capacity in the buffer means. Between the infeed conveyor track and the outlet conveyor track of the buffer module at least two further conveyor tracks are provided. These at least two further conveyor tracks thus form a closed surface of the buffer module.

The closed surface within the buffer module is a considerable advantage because containers which are transported on the infeed conveyor track or on the outlet conveyor track and topple over for some reason, thus remain within the buffer module. The toppled over containers thus can be removed by a user. As these containers have not been destroyed, they can be used further in the container handling process.

According to an advantageous embodiment of the invention the buffer means has at least two buffer modules, arranged parallel to each other in a plane. Between the individual buffer modules a respective transfer means is provided, so that the containers are transferrable from the outlet conveyor track of an initial buffer module to an infeed conveyor track of a subsequent buffer module. Furthermore, the buffer modules have a sliding device, by means of which the transfer devices of each buffer module can be displaced in parallel along the at least two buffer modules depending on the required buffer capacity in the buffer means.

In the buffer means the at least two buffer modules are arranged at a distance parallel to each other. The distance between the buffer modules is required so that the transfer means can be inserted between neighboring buffer modules.

Between two neighboring parallel buffer modules furthermore a cover is inserted. Due to this cover a closed surface or plane, respectively, is formed also between the individual buffer modules, so that no containers possibly toppling over are destroyed.

According to a particularly advantageous embodiment instead of the cover at least one conveyor track, drivable along an infeed direction, is inserted into the distance between two parallel buffer modules. Thus by means of this discharge conveyor track the toppled over containers can be transported to the end of the buffer means. There the containers can be collected by a user and supplied to the further container handling process. Between two neighboring buffer modules a transfer means may be provided, so that the containers are transferrable from the outlet conveyor track of the initial buffer module to an infeed conveyor track of the subsequent buffer module.

The means according to the invention may be configured in such a way that the buffer means comprises a front module, an end module, and at least one intermediate module. The length of the buffer means thus can be varied according to the wishes of a customer by means of individually insertable intermediate modules. The intermediate modules have a standardized module length.

In a particularly advantageous embodiment the buffer means has three buffer modules, which are arranged parallel to each other and at a distance from each other.

The buffer modules of the buffer means may differ with regard to their configuration.

According to a first embodiment each of the three buffer modules of the buffer means has two first conveyor tracks and two second conveyor tracks. The two first conveyor tracks comprise an infeed conveyor track and an immediately neighboring first transfer conveyor, which extends in parallel along the entire length of the buffer module. The two second conveyor tracks likewise comprise an outlet conveyor track and an immediately neighboring second transfer conveyor, which extends in parallel along the entire length of the buffer module. Thus between the infeed conveyor track and the outlet conveyor track of each buffer module there are provided two transfer conveyors, which either are formed by two subchains, respectively, or advantageously by one broad chain. Also, if required, the width of the infeed and outlet conveyor tracks can be increased.

Within the plane formed by the buffer modules at least two sliding devices may be provided. The sliding devices may be endless chains, on which at least one transfer device is supported. The two endless chains may respectively be provided between the initial buffer module and the first cover or discharge conveyor tracks and between the second cover or discharge conveyor tracks and the last buffer module. Due to the arrangement of all conveyor tracks one next to the other a closed surface or plane, respectively, is formed across the entire buffer means.

Each transfer device assigned to a buffer module may exhibit an outer guide and an inner guide. The outer guide and the inner guide form a track for the containers from the infeed conveyor track towards the outlet conveyor track. Each of the transfer devices is mounted on a holding structure in such a way that the transfer device is supported on the sliding device by at least one post. As already mentioned, it is possible to freely and linearly displace the respective transfer devices over the respective buffer modules by means of the sliding device. The transfer means may be provided between the two buffer modules arranged parallel to each other and one after the other. The transfer means comprises an endless chain with an upper redirection and a lower redirection provided on the front module. The upper redirection and the lower redirection are arranged in such a way in the buffer means that the endless chain forms the outlet conveyor track of the initial buffer module and the infeed conveyor track of the subsequent buffer module.

The buffer means is connected with a plurality of drive mechanisms, by which the plural conveyor tracks provided in the buffer means can be driven. A first drive mechanism drives the infeed conveyor track of the initial buffer module. A second drive mechanism drives the first transfer conveyor following the infeed conveyor track of the initial buffer module. A third drive mechanism drives the second transfer conveyor of the initial buffer module. A fourth drive mechanism drives the endless chain which is shared by the initial buffer module and the subsequent buffer module, and which comprises the outlet conveyor track of the initial buffer module and of the infeed conveyor track of the subsequent buffer module, as well as the first transfer conveyor of the subsequent buffer module. Furthermore, the fourth drive mechanism in this embodiment may drive the conveyor tracks provided between the buffer modules instead of a cover for discharging toppled-over containers in the direction of the first transport direction. A fifth drive mechanism drives the sliding device. A sixth drive mechanism drives the endless chain which is shared by the subsequent buffer module and the last buffer module, and which comprises the outlet conveyor track of the subsequent buffer module and of the infeed conveyor track of the last buffer module, as well as the first transfer conveyor of the last buffer module. A seventh drive mechanism drives the second transfer conveyor of the subsequent buffer module. An eighth drive mechanism drives the second transfer conveyor of the last buffer module. The outlet conveyor track of the last buffer module is likewise driven by a separate drive. Advantageously, the outlet conveyor track and the second transfer conveyor of the last buffer module may be driven by a common drive. It is obvious to a person skilled in the art that the arrangement and number of the drive mechanisms depends on the number of conveyor tracks, sliding devices, and further conveyors to be driven.

According to a further embodiment of the buffer modules of the buffer means each buffer module has two first conveyor tracks and a second conveyor track. Thus, a first transfer conveyor is provided between the infeed conveyor track and the outlet conveyor track of each buffer module.

Within the plane formed by the buffer modules at least two sliding devices may be provided, which respectively are endless chains, and on which the at least one transfer device is supported. The two endless chains therein are provided between the initial buffer module and the first cover or the discharge conveyor tracks, as well as between the second cover or discharge conveyor tracks and the last buffer module.

By the arrangement of all the conveyor tracks, which are parallel to each other, one next to the other, a closed surface or plane, respectively, is formed across the entire buffer means.

Each transfer device corresponding to a buffer module may exhibit an outer guide and an inner guide. The outer guide and the inner guide together form a track for containers from the infeed conveyor track to the outlet conveyor track of the respective buffer module. Each of the transfer devices is mounted in such a way on a holding structure that it rests on the sliding device with at least one post. Thus, the respective transfer devices may be displaced freely and linearly over the respective buffer modules. The respective outer guide and the respective inner guide are shaped in such a way in the vicinity of the first transfer conveyors next to the infeed conveyor tracks of the buffer modules that the track runs across the first transfer conveyors. Thus, the containers can be transferred directly onto the outlet conveyor track.

As already stated in the context of the previously described embodiments, the transfer means here also is provided between two buffer modules arranged in parallel and one after the other. The transfer means comprises an endless chain with an upper redirection and a lower redirection provided on the front module. The upper redirection and the lower redirection therein are arranged in such a way in the buffer means that the endless chain forms the outlet conveyor track of the initial buffer module and the infeed conveyor track of a subsequent buffer module.

Here, also, various drive mechanisms correspond to the buffer means, in order to correspondingly drive the individual conveyor tracks of the individual buffer modules. A first drive mechanism drives the infeed conveyor track of the initial buffer module. A second drive mechanism drives the first transfer conveyor following the infeed conveyor track of the initial buffer module. A third drive mechanism drives the endless chain which is shared by the initial buffer module and the subsequent buffer module, and which comprises the outlet conveyor track of the initial buffer module and the infeed conveyor track of the subsequent buffer module, as well as the first transfer conveyor of the subsequent buffer module. Furthermore, in this embodiment the third drive mechanism drives the discharge conveyor tracks provided between the buffer modules instead of a cover. A fourth drive mechanism drives the endless chain which is shared by the subsequent buffer module and the last buffer module, and which comprises the outlet conveyor track of the subsequent buffer module and of the infeed conveyor track of the last buffer module, as well as the transfer conveyor of the last buffer module. A fifth drive mechanism drives the sliding device.

According to a further embodiment of a buffer module for a buffer means the buffer module has a first transport conveyor track, which is an infeed conveyor track, and a second transport conveyor track, which is an outlet conveyor track. Between the infeed conveyor track and the outlet conveyor track of each buffer module a first transfer conveyor and a second transfer conveyor are provided. The first and second transfer conveyors provided between the infeed conveyor track and the outlet conveyor track of each buffer module may be formed by an endless transfer chain.

Within the plane formed by the buffer modules at least one sliding device may be provided, which is configured as a slide, and on which the at least one transfer device rests. A louver band is attached to the slide on either side in the direction of the two transport directions, respectively, which assures on the one hand the function of positioning the sliding device, and on the other hand the closed plane. Furthermore, this louver band additionally serves for discharging containers and in particular for a lateral guidance of the neighboring transfer conveyors. The louver band may be provided centrally in the individual buffer modules, respectively, and is shaped as a loop.

Between the infeed conveyor track and the outlet conveyor track of each buffer module a transfer device is provided. The transfer device has an outer guide and/or an inner guide, which together form a track for the containers from the infeed conveyor track towards the outlet conveyor track. Furthermore, each transfer means encompasses the endless transfer chain, which at the transfer means is deflectable from a first transport direction of the infeed conveyor track to a second transport direction of the outlet conveyor track by means of a first deflection pulley. At a second deflection pulley the endless transfer chain is deflectable from a second transport direction of the outlet conveyor track to a first transport direction of the infeed conveyor track.

The outer guide and/or inner guide of the transfer device may be arranged in such a way that the containers are transferrable from the infeed conveyor track via the endless transfer chain to the outlet conveyor track.

The transfer means is provided between the buffer modules arranged parallel to each other and one after the other. The transfer means also comprises an endless chain with an upper redirection and a lower redirection provided at the front module. The upper and lower redirection therein are arranged in such a way within the buffer means that, for example, the outlet conveyor track of the initial buffer module and the infeed conveyor track of the subsequent buffer module form the endless chain.

For driving the conveyor tracks provided in this embodiment of the buffer module or of the buffer means, respectively, also a plurality of drive mechanisms is provided. A first drive mechanism drives the infeed conveyor track of the initial buffer module. A second drive mechanism drives the endless transfer chain, which follows the infeed conveyor track of the initial buffer module, in the first transport direction, due to the configuration at the end module. Advantageously, it would also be possible to integrate the drive mechanism into the front module. Therein the driving then needs to be done in the second transport direction and the pulling force has to be exerted on the endless transfer chain preceding the outlet conveyor track. A third drive mechanism drives the endless chain which is shared by the initial buffer module and the subsequent buffer module, and which comprises the outlet conveyor track of the initial buffer module and of the infeed conveyor track of the subsequent buffer module. A fourth drive mechanism drives the endless chain which is shared by the subsequent buffer module and the last buffer module, and which comprises the outlet conveyor track of the subsequent buffer module and of the infeed conveyor track of the last. A fifth drive mechanism drives the sliding device. A sixth drive mechanism drives the endless transfer chain which precedes the outlet conveyor track of the subsequent buffer module in a second transport direction. A seventh drive mechanism drives the endless transfer chain which precedes the outlet conveyor track of the last buffer module, in a second transport direction.

The third drive mechanism may also drive at least one conveyor track provided between the initial buffer module and the subsequent buffer module as well as between the subsequent buffer module and the last buffer module. Advantageously the load may be distributed between two drive mechanisms. Therein then the third drive mechanism acts on the discharge conveyor between the initial buffer module and the subsequent buffer module, and the fourth drive mechanism acts on the discharge conveyor between the subsequent and the last buffer module.

According to a further embodiment of the invention a buffer module is shaped as a vertical helix and attached to a carrier. The advantage of this is that with the buffer means described in this embodiment the space required for the set-up can be saved. Buffering the containers thus occurs in the vertical direction, in contrast to the embodiments described previously. The buffer means comprises a front module, an end module and at least one intermediate module. The length of the buffer module may be composed by means of individual intermediate modules of constant module length, curved according to the shape of the helix. The length of the buffer module essentially depends on the demands of the customer.

The buffer module may comprise two first conveyor tracks and two second conveyor tracks, so that between the infeed conveyor track and the outlet conveyor track of each buffer module a first transfer conveyor and a second transfer conveyor are provided. The buffer module may have a sliding device, on which the transfer device is supported.

According to a further embodiment the helix-shaped buffer module has two first conveyor tracks and a second conveyor track. Thus a first transfer conveyor is provided between the infeed conveyor track and the outlet conveyor track of each buffer module.

According to a further embodiment the helix-shaped buffer module exhibits a first conveyor track, which is an infeed conveyor track, and a second conveyor track, which is an outlet conveyor track. Between the infeed conveyor track and the outlet conveyor track of each buffer module there are provided a first transfer conveyor and a second transfer conveyor. The first transfer conveyor and the second transfer conveyor provided between the infeed conveyor track and the outlet conveyor track of the buffer module are configured as an endless transfer chain.

The sliding device may encompass the endless transfer chain, which, at the sliding device, is deflectable from the first transport direction of the infeed conveyor track to a second transport direction of the outlet conveyor track by means of a first deflection pulley. By means of a second deflection pulley the transfer chain may be deflected from a second transport direction of the outlet conveyor track to a first transport direction of the infeed conveyor track.

The outer guide and the inner guide of the transfer device may be arranged in such a way that the containers are transferred from the infeed conveyor track via the endless transfer chain to the outlet conveyor track.

A method for buffering containers according to the FIFO principle is described. Herein the containers may be supplied to an infeed conveyor track of a buffer means from a first container handling unit of a container handling apparatus. By means of a transfer device exhibiting an inner guide and an outer guide the containers are transferred from the infeed conveyor track to an outlet conveyor track of the buffer means. During transfer from the infeed conveyor track to the outlet conveyor track the containers are conducted across further at least two drivable conveyor tracks. The required buffer capacity is set in the method according to the invention by a control unit of the container handling apparatus determining the required capacity for buffering. According to the determined required buffer capacity the sliding device together with the transfer device is displaced along the infeed conveyor track or outlet conveyor track, respectively.

In order to be able to redirect the containers buffered in the buffer means within a closed surface, plural conveyor tracks are driven along with the infeed conveyor track and outlet conveyor track proper, respectively. These conveyor tracks are largely free of load and thus barely exposed to tensions. These conveyor tracks thus simply run along with the infeed conveyor track or outlet conveyor track, respectively, and constitute a safeguard and protection so that none of the containers present in the buffer means or in the buffer module, respectively, fall to the floor and thus are destroyed.

The changes of direction of the outlet conveyor track of an initial buffer module towards the infeed conveyor track of a subsequent buffer module are effected by an interior disc. This interior disc of the loaded outlet conveyor track or infeed conveyor track, respectively, compensates tensions and deflects the point of attack of the force. In this way an intertwining of the tracks of the loaded infeed conveyor track or outlet conveyor track, respectively, is avoided. The further conveyor tracks running along may be deflected by a deflection wheel, as usual.

As already described in the context of the embodiments, the sliding device and thus also the transfer device is positioned by at least one louver band provided in the plane of the buffer means, and thus makes an open configuration without additional superstructures of the buffer means possible. The guiding of the sliding device may also be achieved by lateral guides (for example rails).

BRIEF DESCRIPTION OF THE DRAWINGS

The invention is described in greater detail with the help of embodiments and with reference to the accompanying figures.

FIG. **1** shows a schematic view of a container handling unit in which the buffer means according to the invention is used;

FIG. **2** shows a top view of a first embodiment of the buffer means according to the invention, wherein the infeed into the buffer means and the outlet from the buffer means are also shown;

FIG. **3** shows a top view of a first embodiment of the buffer means, wherein the buffer means is formed from three buffer modules, which are arranged parallel to each other and form a closed surface;

FIG. **4** shows a second embodiment of the buffer means according to the invention, wherein three buffer modules are arranged parallel to each other and form a closed horizontal surface;

FIG. **5** shows a top view of a third embodiment of the buffer means according to the invention, wherein three buffer modules are arranged parallel to each other and form a closed surface;

FIG. **5**A shows a top view of a further variant of the preferred third embodiment of the buffer means according to the invention, wherein three buffer modules are arranged parallel to each other and form a closed surface;

FIG. **6** shows a top view of a first embodiment of a buffer module for the buffer means;

FIG. **7** shows a top view of a second embodiment of the buffer module for the buffer means;

FIG. **8** shows a top view of a third embodiment of the buffer module for the buffer means;

FIG. **9** shows a top view of a first embodiment of the buffer means according to the invention, wherein the maximum buffer capacity for the containers is set;

FIG. **10** shows a top view of a first embodiment of the front module of the buffer means according to the invention, wherein for the sake of clarity the conveyor tracks resting on the buffer means have been omitted;

FIG. **11** shows a view along the section line A-A shown in FIG. **10** of the front module of the buffer means according to the invention;

FIG. **12** shows a view along the section line B-B shown in FIG. **10** of the transfer means provided in the front module of the buffer means;

FIG. **13** shows a top view of a first embodiment of the end module of the buffer means according to the invention, wherein here, too, the individual conveyor tracks have been omitted for the sake of clarity;

FIG. **14** shows a sectional view along the line A-A shown in FIG. **13**;

FIG. **15** shows a sectional view along the section line B-B shown in FIG. **13**;

FIG. **16** shows a top view of a first embodiment of an intermediate module, which is arranged between the front module and the end module in the buffer means according to the invention;

FIG. **17** shows a view along the section line A-A marked in FIG. **16**, wherein here a frame element along the transport direction of the intermediate module is shown;

FIG. **18** shows a sectional view along the section line C-C marked in FIG. **16**;

FIG. **19** shows a sectional view along the line B-B marked in FIG. **16**;

FIG. **20** shows an enlarged representation of the area marked with the circle K**19** in FIG. **19**;

FIG. **21** shows a perspective view of the first embodiment of the intermediate module of the buffer means according to the invention;

FIG. **22** shows an enlarged representation of the area marked with K**21** in FIG. **21**;

FIG. **23** shows a top view of an intermediate module of the first embodiment of the buffer means according to the invention, wherein this intermediate module does not have a drive mechanism for the sliding device;

FIG. **24** shows a view of the intermediate module shown in FIG. **23** from the direction of view marked X;

FIG. **25** shows a perspective view of an intermediate module of the first embodiment without an additional drive mechanism;

FIG. **26** shows a view along the section line marked A-A in FIG. **23**;

FIG. **27** shows an enlarged view of the area marked with the circle K**25** in FIG. **25**;

FIG. **28** shows an enlarged view of the area marked K**26** in FIG. **26**;

FIG. **29** shows a sectional view of the third embodiment through the buffer means according to the invention transverse to the transport direction, wherein the buffer means is composed of three buffer modules;

FIG. **30** shows an enlarged representation of the area marked K**29** in FIG. **29**;

FIG. **31** shows a sectional view transverse to the transport direction of a third embodiment of the buffer means according to the invention, wherein the buffer means likewise is composed of three buffer modules;

FIG. **32** shows an enlarged representation of the area marked K**31** in FIG. **31**;

FIG. **32**A shows an enlarged sectional view through the sliding device of the area marked K**31** in FIG. **31**;

FIG. **33** shows a perspective view of the arrangement of three transfer devices of a first embodiment, wherein each is assigned to a buffer module;

FIG. **34** shows a top view of the arrangement of the three transfer devices of a first embodiment, which are attached to a common structure;

FIG. **35** shows a view of the transfer devices along the transport direction;

FIG. **36** shows a sectional view along the section line marked A-A in FIG. **34**; and,

FIG. **37** shows a perspective view of a further embodiment of the buffer means according to the invention, wherein at least one buffer module is shaped as a helix.

DETAILED DESCRIPTION OF THE INVENTION

In the figures the size ratios of individual elements do not always correspond to the real size ratios, as some shapes are shown in a simplified way and other forms are shown enlarged with respect to the other elements for better illustration.

Identical reference numerals are used for like elements of the invention or elements of like function. Furthermore, for the sake of clarity, only those reference numerals are shown in individual figures, which are required for the description of the respective figure. The embodiments shown are only examples of how the means according to the invention may be realised, and do not constitute a final limitation.

FIG. **1** shows, schematically and significantly simplified, a container handling apparatus **100** for handling containers **2**, for example, plastic bottles, glass bottles, metal cans, etc. The container handling apparatus **100** in the embodiment shown here comprises a first container handling unit **110** and a second container handling unit **120**. Between the first container handling unit **110** and the second container handling unit **120** a buffer means **1** according to the invention is located. Likewise, a further buffer means **1** is arranged downstream from the second container handling unit **120**. It is obvious to a person skilled in the art that the container handling apparatus **100** may also comprise more container handling units than the container handling units **110**, **120** shown here, and likewise may comprise more buffer means **1**.

The first container handling unit **110** may for example be a labeling machine for labeling containers **2** with a label. The second container handling unit **120** for example is a filling unit for filling the containers **2** with a liquid (not shown here). The container handling units **110**, **120** may also be a stretch-blow machine for manufacturing plastic containers **2**, for example, beverage bottles, from preforms, a cleaning unit for cleaning the containers **2**, a packaging unit for packaging the containers **2**, etc. The buffer means **1** are for buffering and for transporting the containers **2** from the individual container handling units **110** to downstream container handling units **120** or to further handling units (not shown here), respectively. A control unit **105** is connected with the elements of the container handling apparatus **100**. The buffer means **1** are controlled according to the signals measured by the control unit **105**, in order to vary the capacity of the individual buffer means **1** in depending on the measurement signals of the control unit **105**.

FIG. **2** shows a top view of a schematic representation of the buffer means **1** according to the invention, which is comprised of three buffer modules **30**. The buffer modules **30** of the buffer means **1** are arranged parallel to each other and are situated in a plane E, which in FIG. **2** is represented by the plane spanned in the X-coordinate direction and in the Y-coordinate direction. The buffer means **1** according to the invention has a front module **33** and an end module **34**. Between the front module **33** and the end module **34** at least one further intermediate module M is inserted. In the smallest set-up variant the buffer means **1** according to the invention is comprised of a front module **33**, an intermediate module M, and an end module **34**. The intermediate module M arranged between the front module **33** and the end module **34** therein exhibits a drive mechanism, if only a single intermediate

module M is provided. The containers (not shown here) reach the buffer means **1** via an infeed **10**. The containers leave the buffer means **1** via an outlet **14**. The individual buffer modules **30** are arranged at a distance A from each other. The front module **33** furthermore supports a transfer means **40**, by which the containers **2** buffered in the buffer means **1** can be transferred from an initial buffer module **30**A to a subsequent buffer module **30**N. In this case a cover **21** is provided between the individual buffer modules so that a closed surface or plane is formed. It is obvious to a person skilled in the art that the embodiment shown in FIG. **2** may also comprise more than three and also of fewer than three buffer modules **30**.

FIG. **3** shows a top view of the buffer means **1** according to the invention, which in the first embodiment shown here also is comprised of three buffer modules **30** arranged parallel to each other. The buffer modules are also located at a distance A from each other. The buffer means **1** according to the invention thus has an initial buffer module **30**A, a subsequent buffer module **30**N, and a last buffer module **30**L. To each buffer module **30** there corresponds a transfer device **36**. By means of the transfer device **36** the containers **2** can be transferred from an infeed conveyor track **31**E of a buffer module **30** via the two transfer conveyors **31** and **32** to an outlet conveyor track **32**A of the same buffer module **30**. Each transfer device **36** has an outer guide **37** and an inner guide **38**. The outer guide **37** and the inner guide **38** are for safely transferring the containers **2** from the infeed conveyor track **31**E to the outlet conveyor track **32**A of the buffer module **30**. The infeed conveyor track **31**E and the at least one transfer conveyor **31** of each buffer module **30** are driven in the first transport direction TR**1**. The outlet conveyor track **32**A and the at least one transfer conveyor **32** of each buffer module are driven in the second transport direction TR**2**.

Into the distance A between the buffer modules **30** a cover **21** (see for example FIG. **9**) may be inserted, in order to thus assure a uniform plane E of the buffer means **1**. In the embodiment shown in FIG. **3** three conveyor tracks **22** are inserted in the distance A between two neighboring buffer modules **30**. The conveyor tracks **22** are drivable in the direction of the first transport direction TR**1**. Thus, it is possible to transport containers **2**, which possibly topple over from a buffer module **30**, to the end module **34** of the buffer means **1** by means of the conveyor tracks **22**. At the end module **34** the containers **2** arriving in this fashion may be collected easily by a user and may, where applicable, be resupplied to the handling or processing of the containers **2**.

For driving the plurality of the first and second transfer conveyors **31**, **32**, infeed conveyor tracks **31**E, outlet conveyor tracks **32**A, sliding devices **35**, and the conveyor tracks **22** in the buffer means **1**, plural drive mechanisms **51**, **52**, **53**, **54**, **55**, **56**, and **57** are provided. A first drive mechanism **51** drives the infeed conveyor track **31**E of the initial buffer module **30**A. A second drive mechanism **52** drives the first transfer conveyor **31** following the first infeed conveyor track **31**E of the initial buffer module **30**A. A third drive mechanism **53** drives the second conveyor track **32** of the initial buffer module **30**A. A fourth drive mechanism **54** drives the endless chain **7** which is shared by the initial buffer module **30**A and the subsequent buffer module **30**N, and which comprises the outlet conveyor track **32**A of the initial buffer module **30**A and of the infeed conveyor track **32**E of the subsequent buffer module **30**N, and the first transfer conveyor **31** of the subsequent buffer module **30**N. Furthermore, the fourth drive mechanism in this embodiment may drive the conveyor tracks **22** provided between the buffer modules, instead of a cover, for discharging toppled over containers **2** in the direction TR**1** of the first transport direction. A fifth drive mechanism **55** drives the sliding device **35**. A sixth drive mechanism **56** drives the endless chain **7** which is shared by the subsequent buffer module **30**N and the last buffer module **30**L, and which comprises the outlet conveyor track **32**A of the subsequent buffer module **30**N and of the infeed conveyor track **31**E of the last buffer module **30**L, as well as the first transfer conveyor **31** of the last buffer module **30**L. A seventh drive mechanism **57** drives the second transfer conveyor **32** of the subsequent buffer module **30**N. An eighth drive mechanism (not shown) drives the second transfer conveyor **32** of the last buffer module **30**L. The outlet conveyor track **32**A of the last buffer module **30**L is likewise driven by a separate drive mechanism (not shown). Advantageously the outlet conveyor track **32**A and the second transfer conveyor **32** of the last buffer module **30**L may be driven by a shared drive mechanism (not shown).

FIG. **4** shows a second embodiment of the buffer means **1** according to the invention. As already mentioned in the description of FIG. **3**, also in this embodiment three buffer modules **30** are arranged parallel to each other. The buffer means **1** has a front module **33** and an end module **34**. Between the front module **33** and the end module **34** two intermediate modules M are inserted in the representation shown in FIG. **4**. The intermediate modules M have a uniform module length ML (see FIG. **26**). To each buffer module **30** there corresponds a transfer device **36**. The containers can be transferred from an infeed conveyor track **31**E of a buffer module **30** to an outlet conveyor track **32**A of the buffer module **30** by means of the transfer device **36**. The transfer device **36** can be displaced in parallel to the buffer modules **30** by a sliding device **35**, in order to in this way vary the buffer capacity of the buffer means **1** according to the invention depending on the requirements. The buffer means **1** is likewise comprised of three buffer modules **30**, wherein an initial buffer module **30**A, a subsequent buffer module **30**N, and a last buffer module **30**L are provided. The containers **2** entering the buffer means **1** are transferred from the initial buffer module **30**A to the subsequent buffer module **30**N, and from there to the last buffer module **30**L, by means of the respective transfer means **40**. The containers **2** leave the last buffer module **30**L via an outlet conveyor track **32**A assigned to the last buffer module **30**L. In analogy to the description of the embodiment shown in FIG. **3** the transfer device **36** is provided with an inner guide **38** and an outer guide **37**, in order to, in this way, safely transfer the containers **2** from the infeed conveyor track **31**E of a module **30** to the outlet conveyor track **32**A of the same module. The individual buffer modules **30** of the buffer means **1** are arranged at a distance A from each other. Into the distance A likewise plural conveyor tracks **22** are inserted. The conveyor tracks **22**, together with the initial buffer module **30**A, the subsequent buffer module **30**N, and the last buffer module **30**L, form a plane E. The containers **2** possibly toppling over in a module can be transported to the end module **34** by means of the conveyor tracks **22**.

In this embodiment (FIG. **4**) also plural drive mechanisms **51**, **52**, **54**, **55**, and **56** are provided for driving the plurality of the transfer conveyors **31**, infeed conveyor tracks **31**E, outlet conveyor tracks **32**A, sliding devices **35**, and conveyor tracks **22** in the buffer means **1**. A first drive mechanism **51** drives the infeed conveyor track **31**E of the initial buffer module **30**A. A second drive mechanism **52** drives the first transfer conveyor **31** following the infeed conveyor track **31**E of the initial buffer module **30**A. A third drive mechanism **54** drives the endless chain **7** which is shared by the initial buffer module **30**A and the subsequent buffer module **30**N, and which comprises the outlet conveyor track **32**A of the initial buffer module **30**A and of the infeed conveyor track **31**E of the

subsequent buffer module **30**N, and the first transfer conveyor **31** of the subsequent buffer module **30**N. Furthermore, the third drive mechanism **54** in this embodiment drives the discharge conveyor tracks **22** provided between the buffer modules **30**A, **30**N, and **30**L instead of a cover **21**. A fourth drive mechanism **56** drives the endless chain **7** which is shared by the subsequent buffer module **30**N and the last buffer module **30**L, and which comprises the outlet conveyor track **32**A of the subsequent buffer module **30**N and of the infeed conveyor track of the last buffer module **30**L, and the transfer conveyor **31** of the last buffer module **30**L. A fifth drive mechanism **55** drives the sliding device **35**.

FIG. **5** shows a third embodiment of the buffer means **1** according to the invention. The buffer means **1** according to the invention likewise comprises three individual buffer modules **30**, which are arranged parallel to each other at a distance A. Likewise plural conveyor tracks **22** are provided in the distance A between the individual buffer modules **30**, which, in analogy to the embodiments already described, are used for discharging possibly toppled-over containers **2**. To each buffer module **30** there also corresponds a transfer device **36**, which transfers the containers **2** from the infeed conveyor track **31**E to the outlet conveyor track **32**A of each module **30**. By means of the arrangement of the three transfer devices **36** the containers **2** can be transferred from the infeed conveyor track **31** of an initial buffer module **30**A to an outlet conveyor track **32**A of the same buffer module **30**A. Between the individual modules **30** there is also provided a transfer means **40** in the front module **33**, so that, in cooperation with the corresponding transfer device **36**, the containers **2** can be transferred from the infeed conveyor track **31**E via the outlet conveyor track **32**A of an initial buffer module **30**A to an infeed conveyor track **31**E of a subsequent buffer module **30**N, and onward via the outlet conveyor track **32**A of it to an infeed conveyor track **31**E of a last buffer module **30**L. The infeed conveyor track **31**E of each buffer module **30** is drivable in a first transport direction TR**1**. In analogy to the first transport direction TR**1**, also the conveyor tracks **22** are drivable, which are provided between the individual modules **30**. In the embodiment shown in FIG. **5** a sliding device **35** corresponds to each buffer module **30**. A louver band **5** (see FIG. **30**) is attached to either side of each sliding device **35**, so that the buffer means **1** according to the invention forms a closed plane E and no containers **2** can fall to the floor, and so that the sliding device can be positioned. The transfer devices **36** are supported on the sliding device **35**. The sliding devices **35** are arranged centrally in each buffer module **30** of the buffer means **1** according to the invention. The outlet conveyor track **32**A of the last buffer module **30**L is drivable in a second transport direction TR**2**, so that the containers **2** can be transported out of the buffer means **1** according to the invention.

In the third embodiment of FIG. **5** plural drive mechanisms **51**, **52**, **53**, **54**, **55**, **56**, and **57** are provided for driving the plurality of infeed conveyor tracks **31**E, outlet conveyor tracks **32**A, sliding devices **35**, endless chain **7**, endless transfer chain **9**, and conveyor tracks **22**. A first drive mechanism **51** drives the infeed conveyor track **31**E of the initial buffer module **30**A. A second drive mechanism **52** drives the endless transfer chain **9**, which follows the infeed conveyor track **31**E of the initial buffer module **30**A, in the first transport direction TR**1**. A third drive mechanism **54** drives the endless chain **7** which is shared by the initial buffer module **30**A and the subsequent buffer module **30**N, and which comprises of the outlet conveyor track **32**A of the initial buffer module **30**A and of the infeed conveyor track **31**E of the subsequent buffer module **30**N. A fourth drive mechanism **56** drives the endless chain **7** which is shared by the subsequent buffer module **30**N and the last buffer module **30**L, and which comprises of the outlet conveyor track **32**A of the subsequent buffer module **30**N and the infeed conveyor track **31**E of the last buffer module **30**L. A fifth drive mechanism **55** drives the sliding device **35**. A sixth drive mechanism **53** drives the endless transfer chain **9**, which precedes the outlet conveyor track **32**A of the subsequent buffer module **30**N, in a second transport direction TR**2**. A seventh drive mechanism **57** drives the endless chain **9**, which precedes the outlet conveyor track **32**A of the last buffer module **30**L, in a second transport direction TR**2**.

The third drive mechanism **54** may also drive at least one conveyor track **22**, which is provided between the initial buffer module **30**A and the subsequent buffer module **30**N, as well as between the subsequent buffer module **30**N and the last buffer module **30**L.

FIG. **5**A shows a variant of the third embodiment of the buffer means **1** according to the invention with a further preferred arrangement of the drive mechanisms. It would advantageously also be possible to integrate the second drive mechanism **52** into the front module **33**. The second drive mechanism **52** drives along the second direction of transport and the pulling force needs to be exerted on the endless transfer chain **9** preceding the outlet conveyor track **32**A of the initial buffer module **30**A. The third drive mechanism **54** drives the endless chain **7** which is shared by the initial buffer module **30**A and the subsequent buffer module **30**N, and which comprises of the outlet conveyor track **32**A of the initial buffer module **30**A and of the infeed conveyor track **31**E of the subsequent buffer module **30**N. The fourth drive mechanism **56** drives the endless chain **7** which is shared by the subsequent buffer module **30**N and the last buffer module **30**L, and which comprises the outlet conveyor track **32**A of the subsequent buffer module **30**N and of the infeed conveyor track **31**E of the last buffer module **30**L. The third drive mechanism **54** may also drive at least one conveyor track **22** provided between the initial buffer module **30**A and the subsequent buffer module **30**N, and the fourth drive mechanism **56** may also drive at least one conveyor track **22** provided between the subsequent buffer module **30**N and the last buffer module **30**L. Advantageously here the load of the two conveyor tracks **22** is distributed to two drive mechanisms. Due to the preferred arrangement of the drive mechanisms of the third embodiment the end module **34** does not require offsets in the end region, thus increasing accessibility and contact protection.

In order to be able to handle containers of larger diameters, too, the width of the infeed conveyor track **31**E of the initial buffer module **30**A and the width of the outlet conveyor track **32**A of the last buffer module **30**L may be increased, if necessary. Preferentially the infeed conveyor track **31**E and the outlet conveyor track **32**A are standard chains. The transfer chains **7** and the endless transfer chains **9** are already wider, due to the tension forces.

All further drive mechanisms **51**, **53**, **55**, and **57** keep their function as already described in FIG. **5**.

FIG. **6** schematically shows the embodiment of a buffer module **30**, as it is used in the embodiment of the buffer means **1** according to the invention described in FIG. **3**. The buffer module **30** has an infeed conveyor track **31**E and a transfer conveyor **31**, which are driven in a first transport direction TR**1**. An outlet conveyor track **32**A and a transfer conveyor **32** are drivable in a second transport direction TR**2**. Thus, two transfer conveyors **31** and **32** are provided between the infeed conveyor track **31**E and the outlet conveyor track **32**A. To the buffer module **30** there also corresponds a sliding device **35**.

To the buffer module **30** there also corresponds a transfer device **36**. The transfer device **36** has an outer guide **37** and an inner guide **38**. The containers **2** enter the module **30** along a first transport direction TR**1** via the infeed conveyor track **31**E. The transfer device **36** transfers the containers **2** from the infeed conveyor track **31**E of the module **30** to the outlet conveyor track **32**A of the same module **30**. The outer guide **37** and the inner guide **38** of the transfer device **36** form a track **363** (see FIGS. **33** and **34**), so that the containers **2** may be transferred from the infeed conveyor track **31**E via the two transfer conveyors **31** and **32** to the outlet conveyor track **32**A.

FIG. **7** shows a top view of a further embodiment of the buffer module **30**, as it is used in the embodiment of the buffer means **1** according to the invention described in FIG. **4**. The buffer module **30** has an infeed conveyor track **31**E and a transfer conveyor **31**, which are drivable in a first transport direction TR**1**. An outlet conveyor track **32**A is drivable in a second transport direction TR**2**. The second transfer conveyor **32** also is the outlet conveyor track **32**A of the embodiment of the buffer module **30** shown here. Thus, between the infeed conveyor track **31**E and the outlet conveyor track **32**A at least one further first transfer conveyor **31** is provided. To the buffer module **30** there may also correspond a sliding device **35**, by which the transfer device **36** of each buffer module that can be displaced depending on the buffer capacity required. The transfer device **36** for the buffer module **30** of the embodiment shown in FIG. **7** also has an outer guide **37** and an inner guide **38**. The outer guide **37** and the inner guide **38** together form a track **363** (see FIGS. **33** and **34**) for the containers **2**. The outer guide **37** and the inner guide **38** in the vicinity of the infeed conveyor track **31**E and of the neighboring first transfer conveyor **31** of the buffer module **30** are shaped in such a way that the track **363** formed runs essentially transversely to the at least one first conveyor track **31**. The containers **2** thus immediately reach the outlet conveyor track **32**A of the buffer module **30**.

FIG. **8** shows an embodiment of the buffer module **30** as it is used in the embodiment of the buffer means **1** of FIG. **5**. The buffer means **30** has an infeed conveyor track **31**E which is driven in a first transport direction TR**1**. Furthermore, the buffer module **30** has a second outlet conveyor track **32**A, which is drivable in a second transport direction TR**2**. Furthermore between the infeed conveyor track **31**E and the outlet conveyor track **32**A of each buffer module **30** a further first transfer conveyor **31** and a further second transfer conveyor **32** are provided.

The first transfer conveyor **31** and the second transfer conveyor **32** provided between the infeed conveyor track **31**E and the outlet conveyor track **32**A are configured as an endless transfer chain **9**. The sliding device **35** for the transfer device **36** corresponding to each buffer module **30** is arranged centrally in each buffer module **30** in this embodiment. The transfer device **36** is supported on the sliding device **35**, which in turn is connected to a louver band **5** on either side. Thus, by the louver band **5** a uniform closed surface or plane E for each buffer module **30** is formed. The respective transfer device **36** transfers the containers **2** from the infeed conveyor track **31**E to the outlet conveyor track **32**A of the buffer module **30**. Each transfer device **36** of the embodiment described in FIG. **8** has the endless transfer chain **9** comprising individual transfer conveyors **31** and **32**. The endless transfer chain **9** runs along the first transfer conveyor **31** up to the first deflection pulley **11** in a first transport direction TR**1**, is deflected horizontally at the deflection pulley **11**, and thus arrives in the second transport direction TR**2** as transfer conveyor **32**. Back at the front module **33** the second transfer conveyor is deflected vertically and runs along a guide below the closed surface or plane E along a first transport direction TR**1** up to another vertical deflection at the end module **34**. Then, the second transfer conveyor **32** is again above the closed surface or plane E, and again runs along the second transport direction TR**2** up to the second horizontal deflection pulley **12**. There the second transfer conveyor **32** is deflected again, and thus again becomes the first transfer conveyor **31** along a first transport direction TR**1**. By means of two vertical deflections at the end module **34** and the front module **33** the course of the endless transfer chain **9** is closed again.

FIG. **9** shows a top view of the first embodiment of the buffer means **1** according to the invention, wherein the buffer capacity of the buffer means **1** is fully used. The buffer means **1** comprises the front module **33** and the end module **34**. Between the front module **33** and the end module **34** three intermediate modules M are arranged in the embodiment shown in FIG. **9**. The buffer means **1** has three buffer modules **30**, arranged parallel to each other at a distance A. In the embodiment shown in FIG. **9** no conveyor tracks **22** are inserted in the distance A between the buffer modules **30**. Instead of the conveyor tracks **22** it is also possible to use a cover **21**, so that a uniform and closed surface E for the buffer means **1** can be achieved. The containers **2** enter the buffer means **1** along a first transport direction TR**1** on an infeed conveyor track **31**E of an initial buffer module **30**A. Eventually the containers **2** leave the buffer means **1** via an outlet conveyor **32**A of a last buffer module **30**L of the buffer means **1** along a second transport direction TR**2**. The transfer devices **36**, each of which respectively corresponds to a buffer module **30**, are located in the region of the end module **34** of the buffer means **1**. With the position of the transfer means **36** as shown in FIG. **9** the full buffer capacity of the buffer means **1** can be used. At the front module **33** of the buffer means **1** a transfer means **40** is arranged between each pair of neighboring modules **30**. In the transfer means **40** between the initial buffer module **30**A and the subsequent buffer module **30**N the containers **2** can be transferred from the outlet conveyor track **32**A of the initial buffer module **30**A to the infeed conveyor track **31**E of the subsequent buffer module **30**N. With the transfer means **40** between the subsequent buffer module **30**N and the last buffer module **30**L the containers **2** can be transferred from the outlet conveyor track **32**A of the subsequent buffer module **30**N to the infeed conveyor track **31**E of the last buffer module **30**L.

According to the embodiments of the buffer means described in FIGS. **3** to **5**A, a transfer means **40** is provided between two neighboring buffer modules **30**. Each transfer means **40** essentially comprises an endless chain **7** and an upper redirection **44** and lower redirection **45** (see FIG. **11**) provided at the front module **33**. The upper redirection **44** and the lower redirection **45** are arranged in such a way in the buffer means **1** that the endless chain **7** forms the outlet conveyor track **32**A of the initial buffer module **30**A and the infeed conveyor track **31**E of the subsequent buffer module **30**N.

FIG. **10** shows a top view of a first embodiment of the front module **33** of the buffer means **1** according to the invention. In the representation shown here, the conveyor tracks are not shown. The front module **33** is configured for a buffer means **1** comprising three buffer modules **30**. The buffer module **30** carries a plurality of support rails **47**, on which the driven conveyor tracks are running As already mentioned in the description of FIG. **9**, a transfer means **40** is arranged between each of two neighboring buffer modules **30**. The transfer means **40** comprises an upper redirection **44** and a lower redirection **45** (see FIG. **11**). By means of the upper redirection **44** and the lower redirection **45** the endless chain **7** is

redirected, which thus, as already described in FIG. **9**, forms both the outlet conveyor track **32**A of the initial buffer module **30**A and the infeed conveyor track **31**E of the subsequent buffer module **30**N. In the representation shown in FIG. **10** the containers **2** (not shown here) enter the front module **33** along the first transport direction TR**1** in the vicinity of the transfer means **40**. The containers **2** leave the front module **33** along the second transport direction TR**2**. Between the buffer modules **30** arranged in parallel a cover **21** is provided. The cover **21** is necessary for the buffer means **1** to form the uniform and closed surface E. The endless chain **7** therein is conducted round the circular upper redirection **44**. To the outer edge of the endless chain **7** there corresponds a guardrail **42**. By means of the guardrail **42** the containers **2** are prevented from falling off the buffer means **1** during the redirection of the endless chain **7**. By means of a plurality of adjusting elements **43** the guardrail **42** can be adapted to the containers **2** to be buffered in the buffer means **1**, so that a free and uninhibited transport or redirection, respectively, of the containers **2** within the buffer means **1** is assured. Furthermore, all drive axles **48**, by which the individual conveyor tracks can be driven with motors (not shown here), are connected with the buffer module **33**.

FIG. **11** shows a view of the front module **33** along the direction marked A-A in FIG. **10**. The guardrail **42** corresponding to the upper redirection **44** and the track guardrails **46** may respectively be adjusted to the width of the containers **2** to be transported by means of a plurality of adjusting elements **43**. FIG. **11** furthermore shows the lower redirection **45** for the endless chain **7**, corresponding to the upper redirection **44**.

FIG. **12** shows a detailed view of the section through a transfer means **40** indicated B-B in FIG. **10**. The guardrail **42** therein is arranged in such a way that it exhibits a distance to the surface of the upper redirection **44** and of the endless chain **7** conducted around the upper redirection **44**. The upper redirection **44** and the lower redirection **45** are configured to rotate about a common axis **25**. By the rotatability of the upper redirection **44** and of the lower redirection **45** the redirection of the endless chain **7** is made easier. The endless chain **7** with one edge makes contact with the upper redirection **44** or the lower redirection **45**, respectively. With the other edge the endless chain **7** makes contact with a guidance **27**. Thus, the endless chain **7** is fully guided and cannot come off. In the view shown in FIG. **12** the section of the endless chain **7** is in contact with the upper redirection **44** on the right hand side of FIG. **12** acts as outlet conveyor track **32**A of a module **30**. The section of the endless chain **7** in contact with the upper redirection **44** on the left hand side of FIG. **12** forms the infeed conveyor track **31**E of a subsequent buffer module **30**N.

FIG. **13** shows a top view of a first embodiment of the end module **34** of the buffer means **1**. The embodiment of the end module **34** shown in FIG. **13** is suitable for a buffer means **1** composed of three buffer modules **30**. A cover **21** is provided in the distance A between the individual modules **30**, so that the uniform and closed plane E of the buffer means **1** is achieved. The end module **34** essentially is for redirecting the conveyor tracks of the individual buffer modules **30**, so that these are directed back to the front module **33** in the lower region of the buffer means **1**. Plural axles **60** to **63** run through the initial buffer module **30**A, the subsequent buffer module **30**N, as well as the last buffer module **30**L. The axle **60** can be engaged by a corresponding drive mechanism. The axle **60** carries plural discs **64**, so that plural conveyor tracks can be driven or redirected, respectively. To the initial buffer module **30**A there furthermore corresponds an axle **62**, which may also be connected with a drive mechanism. The axle **62** also carries plural discs **65**, by means of which the conveyor tracks of the initial buffer module **30**A may be driven or redirected, respectively. An axle **61**, which extends into the region of the subsequent buffer module **30**N, is provided at the last buffer module **30**L. In this region of the subsequent buffer module **30**N also plural discs **64** are situated, by means of which the conveyor tracks of the subsequent buffer module **30**N can be driven or redirected, respectively. Furthermore an axle **63**, which also carries plural discs **66**, is provided at the last buffer module **30**N. By means of these discs **66** the conveyor tracks of the last buffer module **30**L can be driven or redirected, respectively.

FIG. **14** shows a view of the end module **34** of FIG. **13** along the section line marked A-A in FIG. **13**. At the upper side **70** of the buffer means **1** plural support rails **47** correspond to each buffer module **30**. The individual buffer modules **30** are separated by the cover **21**. By means of the axle **61** essentially the conveyor tracks (not shown here) of the subsequent buffer module **30**N can be driven. At the bottom side **71** of the buffer means **1** the conveyor tracks are directed back to the front module **33**.

FIG. **15** shows a section view of the section line indicated B-B in FIG. **13**. The axle **62**, as can be seen from FIG. **13**, is located at the initial buffer module **30**A of the end module **34**. The discs **65** carried by the axle **62** are for guiding, redirecting and/or driving of the individual conveyor tracks (not shown) of the initial buffer module **30**A.

FIG. **16** shows a top view of an embodiment of a buffer module M which has been inserted between the front module **33** and the end module **34**. The intermediate module M shown in FIG. **16** also carries an axle **67**. This axle **67** is also engaged by a drive mechanism, which ultimately is responsible for the movement of the sliding devices **35** both along the first transport direction TR**1** and along the second transport direction TR**2**. The intermediate module M shown in FIG. **16** at least needs to be located between the end module **34** and the front module **33**, because only in this way it is possible to displace the sliding devices **35** according to the required buffer capacity of the buffer means **1**. The intermediate module M also comprises three individual buffer modules **30**, which are arranged at a distance A from each other. In the distance A between the individual buffer modules **30** the cover **21** is located, in order to thus create a uniform and closed surface or plane E of the buffer means or intermediate module M, respectively. The individual buffer modules **30** carry the support rails **47** for the conveyor tracks (not shown) of the buffer means **1**.

FIG. **17** shows a sectional view of the section line marked A-A in FIG. **16** and thus the side view of a frame portion **73** as it is used in the configuration of the intermediate module M. At one end the frame portion **73** has a lug **74**. The lug **74** has plural bores **76**. Plural bores **75** are also formed at the end of the frame portion **73** opposite the lug **74**. In case more than two intermediate modules M are inserted between the front module **33** and the end module **34**, the intermediate module M can be connected to a further intermediate module M by the lug **74**. To this end bolts (not shown) are inserted through the bores **76** of the lug of the further intermediate module M to be connected with the already present intermediate module M and through the bores **75** of the already present intermediate module M. In this way it is possible to adjust the length of the buffer means **1** according to customer requirements, based on a modular configuration. Furthermore, in this view the chain path of the sliding device **35** around the drive mechanism (not shown here), which engages the axle **67**, is shown. For transmitting the torque to the chain of the sliding device **35**, drive

wheels **68** are mounted on the axle **67**. In order to provide for a maximum looping of the drive wheels **68** of the chain of the sliding device **35**, additional guide axles **78** with deflection rollers **80** are used. In addition to the deflection rollers **80** also the rollers **79** of the further tracks for the chain return are provided on these guide axles **78**.

FIG. **18** shows a section through the intermediate module M along the section line C-C indicated in FIG. **16**. The intermediate module M is configured box-like. On the upper side **70** of the intermediate module M a plurality of support rails **47** are provided, on which the conveyor tracks (not shown) of the individual buffer modules **30** are guided. The buffer modules **30** are also arranged at a distance A from each other. Within the box-like configuration of the intermediate module M at least one guide axle **78** is provided. By means of the guide axle **78** it is possible to redirect the conveyor tracks in the inner area I of the intermediate module M from the end module **34** to the front module **33**. The first transfer conveyors **31**, the second transfer conveyors **32**, the infeed conveyor tracks **31**E, the outlet conveyor tracks **32**A, the sliding device **35** and the conveyor tracks **22** therein rest on corresponding rollers **79** of the guide axle **78**.

FIG. **19** shows a view of the intermediate module M along the section line indicated B-B in FIG. **16**. To the axle **67** of the intermediate module M there correspond two further guide axles **78**, which also carry a plurality of rollers **79** for guiding the conveyor tracks (not shown). Furthermore, the guide axle **78** carries plural deflection rollers **80**, wherein each deflection roller **80** directly corresponds to the sliding device **35** on the upper side **70** of the intermediate module M. The axle **67** directly affects the sliding device **35** through the drive wheels **68**. The drive mechanism (not shown) connected with the axle **67** is operated, if an increased capacity for buffering the containers **2** is required within the buffer means **1**. The sliding device **35** can be displaced on the upper side **70** of the intermediate module M according to the required buffer capacity. The intermediate module M is provided with a cover **81** on the bottom side **71**.

FIG. **20** shows an enlarged representation of the area marked K**19** in FIG. **19**. The cover **81** is also configured in a modular fashion. The individual modules of the cover **81** can be connected to each other by a screw **82** and a nut **83**. In this way also quick and easy access to the inner area I of the buffer module M is possible.

FIG. **21** shows a perspective view of the intermediate module M, which is connected to a drive mechanism for moving the sliding device **35** (not shown here) along the intermediate module M. In FIG. **21** the box-like configuration of the intermediate module M is obvious. On the bottom side **71** the intermediate module M is provided with the cover **81**. The frame portions **73**, which connect the upper side **70** with the bottom side **71** of the intermediate module M, are provided for lateral stabilization of the intermediate module M.

FIG. **22** shows an enlarged representation of the area marked K**21** in FIG. **21**. The cover **21** exhibits at least one lug **21**L. Likewise, each support rail **47** exhibits a lug **47**L. By means of these lugs **21**L and **47**L intermediate modules M can be connected to each other. For this purpose the lugs **21**L of the cover **21** and the lugs **47**L of the support rails **47** exhibit corresponding mounting elements **84**, by which the individual neighboring intermediate modules M of the buffer means **1** can be connected to each other.

FIG. **23** shows a top view of an intermediate module M, which is intended only for guiding the conveyor tracks of the buffer means **1**. This intermediate module M shown in FIG. **23** is only for increasing the length or buffer capacity, respectively, of the buffer means **1**. The intermediate module M, in analogy with the intermediate module M already described in FIG. **16**, also comprises three buffer modules **30** arranged at a distance A from each other. The cover **21** is provided in the distance A between the buffer modules **30**.

FIG. **24** shows a view of the intermediate module M from the first transport direction TR**1**. Here also at least one guide axle **78** is inserted between the lateral frame portions **73** (see FIGS. **17**, **21**, **25**, **26**) of the intermediate module M. The guide axle **78** carries a plurality of rollers **79**, which are provided for the return of the conveyor tracks (not shown here) moved on the upper side **70** of the intermediate module M. The conveyor tracks are supported on the correspondingly provided support rails **47** on the upper side **70** of the intermediate module M.

FIG. **25** shows a perspective view of the intermediate module M, which does not comprise a drive mechanism for the movement of the sliding device **35**. The intermediate module M is also of a box-like configuration and exhibits at least two lateral frame portions **73** for stabilization and for the attachment of further elements (not shown), respectively.

FIG. **26** shows a view along the section line A-A shown in FIG. **23**. The frame portion **73** also has a lug **74**, by means of which the individual neighboring intermediate modules M of the buffer means **1** can be connected. Due to this modular configuration the length of the buffer means **1** can be easily adapted to the requirements of the customer. As already mentioned, all intermediate modules M have an equal module length ML. Furthermore the frame portion **73** exhibits plural seats **85** for the attachment of further elements (not shown) of the buffer means **1**.

FIG. **27** shows an enlarged representation of the area marked K**25** in FIG. **25**. The cover **21** exhibits at least one lug **21**L. Likewise each support rail **47** is provided with a lug **47**L. The lugs **21**L and **47**L carry corresponding mounting elements **84**, by means of which the individual neighboring intermediate modules M can be connected to each other.

FIG. **28** shows an enlarged representation of the area marked K**26** in FIG. **26**. The frame portion **73** exhibits plural seats **85** for the attachment of a further element (not shown) of the buffer means **1**.

FIG. **29** shows a sectional view of the third embodiment shown in FIG. **5** of the buffer means **1** along the section line S-S. In the embodiment shown in FIG. **29** also three buffer modules **30** are arranged parallel to each other. Between the individual buffer modules **30** conveyor tracks **22** are provided, which can be driven along the first transport direction TR**1**, so that containers **2** potentially toppled over can be transported towards the end module **34**. Between the two lateral frame portions **73** a guide axle **78** is provided, which together with the rollers **79** forms a guide for the conveyor tracks, in order to return them to the front module **33** of the buffer means **1**. The individual conveyor tracks, like for example the infeed conveyor tracks **31**E, the first transfer conveyors **31**, the second transfer conveyors **32**, the outlet conveyor tracks **32**A, the conveyor tracks **22** or the sliding devices **35**, respectively, therein are supported on a plurality of rollers **79**. For the description of FIG. **29** it is assumed that the first transport direction TR**1** is directed into the plane of the drawing. Between the infeed conveyor track **31**E and the outlet conveyor track **32**A immediately the endless transfer chain **9** follows. In the center of the initial buffer module **30**A the sliding device **35** is located, of which the louver band **5** (see FIG. **30**) is shown.

FIG. **30** shows an enlarged representation of the area marked K**29** in FIG. **29**. In FIG. **30** thus the configuration of the last buffer module **30**L is described. On the upper side **70** of the buffer means **1** the individual conveyor tracks of the last

buffer module **30**L are supported on the correspondingly provided guides **47**. The outlet conveyor track **32**A of the last buffer module **30**L has two extensions **90**, which effect a lateral stabilization and guiding of the outlet conveyor track **32**A, on the side facing the guides **47**. In the middle between the infeed conveyor track **31**E and the outlet conveyor track **32**A the louver band **5** of the sliding device **35** is provided. The louver band **5** also has two extensions **90**, which effect a lateral guiding of the louver band **5**. Between the infeed conveyor track **31**E and the louver band **5**, as well as between the louver band **5** and the outlet conveyor track **32**A the endless transfer chain **9** is located. The endless transfer chain **9** exhibits a TAB-guidance **92** on the side facing the guides **47**. The endless transfer chain **9** is laterally supported by the TAB-guidance on the guide **47** with the louver band **5**. Additionally, the TAB-guidance **92** extends under the guide **47** and thus provides for a reliable guiding of the transfer chain **9** in the plane E. The infeed conveyor track **31**E of the last buffer module **30**L also exhibits a TAB-guidance **92**. By the TAB-guidance **92** of the infeed conveyor track **31**E a lateral guiding between the support rails **47** and at the same time a guiding of the infeed conveyor track **31**E within the plane E is achieved. Thus all endless chains **7** and **9** are secured against a lateral rising in the horizontal deflections **11**, **12**, **44**, and **45**.

In FIG. **31** also the sectional view of the embodiment of the buffer means **1** shown in FIG. **5** along the section line S-S is shown. The difference between FIG. **31** and FIG. **29** is that the individual conveyor tracks or the supports for the individual conveyor tracks are configured differently. An essential difference is that the guide axle **78** located between the lateral frame portions **73** carries a plurality of rollers **79**, all of which exhibit the same diameter. Contrary to FIG. **29** the rollers **79** for guiding the louver band **5** below the upper side **70** of the buffer means **1** have the same diameter as the other rollers **79**.

FIG. **32** shows an enlarged representation of the area marked K**31** in FIG. **31**. Likewise the last buffer module **30**L is described in cross section. The configuration of the individual conveyor tracks in the other buffer modules **30** is analogous. The outlet conveyor track **32**A of the last buffer module **30**L has two extensions **90**, by which the outlet conveyor track **32**A is laterally supported on the support rails **47**. In the center between the infeed conveyor track **31**E and the outlet conveyor track **32**A the louver band **5** of the sliding device **35** is provided. The louver band **5** also has two extensions **90**, by which the louver band **5** supports itself laterally on and is guided by the support rails **47**, on the side facing the support rails **47**. Between the infeed conveyor track **31**E and the louver band **5** as well as between the louver band **5** and the outlet conveyor track **32**A the endless transfer chain **9** is provided. The endless transfer chain **9** also exhibits a TAB-guidance **92** on the side facing the support rails **47**. This TAB-guidance **92** is guided by the support rail **47** shared by the outlet conveyor track **32**A, the endless transfer chain **9**, and the infeed conveyor track **31**E with the endless transfer chain **9**. For support and guidance, respectively, of the endless transfer chain **9** the louver band **5** has a larger chain height D. Instead of the higher chain, which requires a lot of material, a thin chain with an U-shaped contour or ridges attached at the sides for heightening at the sides may be used. Thus along the entire length of the buffer modules the endless transfer chain **9** is guided laterally with respect to the louver band **5**, independent of the position of the transfer device **36**. In the vicinity of the sliding device **31** the deflection pulleys **11** and **12** take over the guiding of the transfer chain **9** on the inner side by engaging the upper notch **50**. Analogously the redirections **44** and **45**, as well as the outer guidance **27**, engage the TAB-guidances of the endless chain **7**. Thus, again all endless chains **7** and **9** are secured against a lateral rising in the horizontal deflections **11**, **12**, **44**, and **45**.

FIG. **32**A shows an enlarged sectional view through the sliding device of the area marked K**31** in FIG. **31**, however, with a further preferred variant of the TAB-chains and their guidance. Again the last buffer module **30**L is described in cross section. The configuration of the individual conveyor tracks in the other buffer modules **30** is analogous. The outlet conveyor track **32**A in the last buffer module **30**L has two extensions **90**, by which the outlet conveyor track **32**A is laterally supported on the support rails **47**. In the center between the infeed conveyor track **31**E and the outlet conveyor track **32**A the first deflection pulley **11** of the sliding device **35** is provided. The deflection pulley **11** is pivoted on a sliding device **35**, and the sliding device **35** is supported and guided by support rails **47**. The endless transfer chain **9** is provided between the infeed conveyor track **31**E and the deflection pulley **11**, and between the deflection pulley **11** and the outlet conveyor track **32**A. The endless transfer chain **9** also has a TAB-guidance **92** on the side facing the support rails **47**. This TAB-guidance is guided laterally on the support rail **47**, which is shared by the outlet conveyor track **32**A, the endless transfer chain **9**, and the infeed conveyor track **31**E with the endless transfer chain **9**. In the vicinity of the sliding device **35** the deflection pulleys **11** and **12** take over the guiding of the transfer chain **9** on the inner side by engaging the upper notch **50**. The outer guidance of the endless transfer chain **9** in the vicinity of the sliding device **35** is effected also by an opposite circular guide formed in the carrier board (not shown) of the sliding device **35**. Analogously, the redirections **44** and **45**, as well as the outer guidance **27**, engage the TAB-guidance of the endless chain **7**. Thus, again, all endless chains **7** and **9** are secured against a lateral rising in the horizontal deflections **11**, **12**, **44**, and **45**.

FIG. **33** shows a perspective view of three transfer devices **36**, each of which is assigned to a buffer module **30**. Each transfer device **36** has an outer guide **37** and an inner guide **38**. The outer guide **37** and the inner guide **38** are arranged in such a way that a track **363** is formed, in which the containers **2** to be buffered or guided, respectively, are transferred from the infeed conveyor track **31**E of a buffer module **30** to an outlet conveyor track **32**A of the buffer module **30**. The individual transfer devices **36** are mounted on a holding structure **3**. The entire holding structure **3** is supported on the sliding device **35** by means of at least one post **360**. In the embodiment shown in FIG. **33** two sliding devices **35** are provided, so that at least two posts **360** are provided, which connect the holding structure **3** to the sliding devices **35**. Due to this arrangement the transfer devices **36** can be displaced freely and linearly over the respective buffer modules **30**.

FIG. **34** shows a top view of the holding structure **3** with the three transfer devices **36** arranged on it according to FIG. **33**. The inner guide **38** and the outer guide **37** of each transfer device **36** are mounted to the holding structure **3** with corresponding mounting elements **39**. Alternatively the outer guide **37** may be replaced with a fitting element. This is inserted into a provided guide and locked in place by means of a quick fastener. For an exchange the transfer device is moved to the end module **34** in transport direction TR**1**, as there all buffer modules **30** of the buffer means **1** are freely accessible. In this way for example the width of a track **363** can be changed easily and quickly.

FIG. **35** shows a front view of the arrangement of the transfer devices **36** according to FIG. **33** in transport direction. The inner guide **38** and the outer guide **37** of each transfer device **36** hang from a plurality of arms **41**. The poles or posts **360** which support the transfer devices **36** on the

sliding devices **35** are also mounted on the holding structure **3** in an adjustable manner. The arms **41** carry the adjusting elements **49** (see FIG. **35**), through which the width of the track or the position of the outer guide **37**, respectively, can be changed in a simple way.

FIG. **36** shows the view of the section line indicated A-A in FIG. **34**. The transfer device **36** is attached to the holding structure **3** with arms **41** in an adjustable manner. One of the arms **41** carries the inner guide **38**, which comprises two guiding elements. Likewise a further arm **41** carries the outer guide **37**, which also comprises two guiding elements, which are adjustable independently of each other. The outer guide **37** itself is arranged on an adjusting element **49**. The width of the track **363** (see FIG. **33**) formed by the inner guide **38** and the outer guide **37** can be set with the adjusting element **49**. The holding structure **3** is supported on the sliding device **35** by a pole or post **360**. As already described previously, the holding structure **3** with the at least one transfer device **36** can be displaced by means of the sliding device **35** in such a way that a buffer capacity of the buffer means **1** can be set.

FIG. **37** shows a further embodiment of the buffer means **1** according to the invention. Here a buffer module **30** is shaped to the likeness of a vertical helix **20**. The helix **20** is mounted to a carrier **23** and extends in vertical direction V. The buffer module **30** also has a front module **33** and an end module **34**. Between the front module **33** and the end module **34** at least one intermediate module M is inserted. The number of intermediate modules M between the front module **33** and the end module **34** is determined by the required total length of the buffer means **1**. The intermediate modules M are curved according to the shape of the helix **20** and exhibit a constant module length ML. The containers **2** moving along the buffer means **1** are correspondingly transported in the vertical direction V along the helix **20** on an infeed conveyor track **31**E. The buffer module **30** also exhibits a sliding device **35**, on which the transfer device **36** is supported. By means of the transfer device **36** the containers **2** are transferred from the infeed conveyor track **31**E to the outlet conveyor track **32**A of the buffer module **30**. The outlet conveyor track **32**A returns the containers **2** to the front module **33**, which is situated in the vicinity of the floor space **130** of the buffer means **1**, according to the embodiment shown in FIG. **37**. As already described, the sliding device **35** is displaced along the buffer module **30** shaped as the helix **20**, in order to thus change the buffer capacity of the buffer means **1**. The transfer of the containers **2** from the infeed conveyor track **31**E to the outlet conveyor track **32**A has already been discussed in detail in the context of the embodiments described previously.

Furthermore, the invention also discloses a method for buffering containers **2** according to the FIFO-principle. A buffer means **1** receives the containers **2** from a first container handling unit **110** (see FIG. **1**) on an infeed conveyor track **31**E. The infeed conveyor track **31**E is part of a buffer module **30** of the buffer means **1**. The containers **2** in the buffer means **1** are transferred from the infeed conveyor track **31**E of the buffer module **30** to an outlet conveyor track **32**A of the buffer module **30** or of the buffer means **1**, respectively, by means of a transfer device **36**, which has an inner guide **38** and an outer guide **37**. During transfer from the infeed conveyor track **31**E to the outlet conveyor track **32**A the containers **2** are conducted via further at least two drivable conveyors **31**, **32**. For setting the required buffer capacity of the buffer means **1** a control unit **105** is provided, which is connected with the container handling apparatus **100**. A sliding device **35** corresponds to the buffer module **30** or each of the buffer modules **30**, respectively, so that the transfer device **36** can be displaced with the sliding device **35** in parallel along the infeed conveyor track **31**E or the outlet conveyor track **32**A according to the required buffer capacity. The required buffer capacity is determined by the control unit **105** and is correspondingly transmitted to the control of the sliding device **35**.

It is obvious to a person skilled in the art that various drive mechanisms need to be provided for driving the various conveyors (infeed conveyor track **31**E, outlet conveyor track **32**A, conveyors **31**, **32**, etc). The drive mechanisms therein need to be configured in such a way that a disruption-free and individually controllable driving of the individual conveyors and of the sliding device **35** is assured.

The invention has been described with reference to preferred embodiments. However, it is obvious to a person skilled in the art that modifications and alterations may be made without leaving the scope of the subsequent claims.

REFERENCE NUMERALS

1 buffer means
2 article (container)
3 holding structure
5 louver band
50 upper groove/edge
7 endless chain
9 endless transfer chain
10 infeed
11 first deflection pulley
12 second deflection pulley
14 outlet
20 vertical helix
21 cover
21L lug of cover
22 conveyor track
23 carrier
25 axis
27 outer guidance of endless chain
30 buffer module
30A initial buffer module
30N subsequent buffer module
30L last buffer module
31 first transfer conveyor
31E infeed conveyor track of buffer module
32 second transfer conveyor
32A outlet conveyor track of buffer module
33 front module
34 end module
35 sliding device
36 transfer device
37 outer guide
38 inner guide
39 mounting element
40 transfer means
41 arm
42 guardrail
43 adjusting element
44 upper redirection
45 lower redirection
46 track guardrail
47 support rail
47L lug of support rail
48 drive axle
49 adjusting element
51 first drive mechanism; drive
52 second drive mechanism; drive
53 third drive mechanism; drive
54 fourth drive mechanism; drive
55 fifth drive mechanism; drive

56 sixth drive mechanism; drive
57 seventh drive mechanism; drive
60 axle
61 axle
62 axle
63 axle
64 disc
65 Disc
66 disc
67 axle
68 drive wheel
70 upper side
71 bottom side
73 frame portion
74 lug
75 bore
76 bore
78 guide axle
79 roller
80 deflection roller
81 cover
82 screw
83 nut
84 mounting element
85 seat
86 side guidance
90 extension
92 TAB-guidances
100 container handling unit
105 control unit
110 first container handling unit
120 second container handling unit
130 floor space
360 post
363 track
A distance between two buffer modules
B width of buffer module
D chain height
E plane
I inner area
M intermediate module
ML module length
TR**1** first transport direction
TR**2** second transport direction
V vertical direction
X X-coordinate direction
Y Y-coordinate direction

What is claimed is:

1. A buffer means for containers operating according to the first in-first out principle, comprising:

at least one infeed conveyor track drivable along an infeed direction;

at least one outlet conveyor track drivable along an outlet direction;

a buffer module formed by the at least one infeed conveyor track and the at least one outlet conveyor track which are arranged parallel to each other and having a width;

a first edge, at the infeed conveyor track of the buffer module for the containers;

a second edge, at the outlet conveyor track for the containers;

a transfer device with an outer guide, so that the containers are transferrable from the infeed conveyor track to the outlet conveyor track of the buffer module;

a sliding device for sliding the transfer device in parallel along the infeed conveyor track or the outlet conveyor track, respectively, in dependence on a required buffer capacity in the buffer means;

at least one further drivable transfer conveyor arranged between the infeed conveyor track and the outlet conveyor track of the buffer module in such a way that it is parallel to the buffer module; and,

a drive mechanism for the at least one further drivable transfer conveyor for a first transport direction or a second transport direction, wherein each drivable transfer conveyor and the sliding device has its own drive mechanism so that an individually controllable driving of the drivable transfer conveyors and of the sliding device is assured.

2. The buffer means according to claim **1**, wherein at least two buffer modules are arranged parallel to each other and in a plane, wherein one transfer means is provided between the two parallel buffer modules, so that the containers are transferrable from the outlet conveyor track of an initial buffer module to the infeed conveyor track of a subsequent buffer module.

3. The buffer means according to claim **2**, wherein the at least two buffer modules are arranged parallel and at a distance to each other.

4. The buffer means according to claim **3**, wherein a cover is inserted into the distance between the at least two parallel buffer modules.

5. The buffer means according to claim **3**, wherein into the distance between the at least two parallel buffer modules there is inserted at least one conveyor track, which is drivable along the infeed direction, in order to transport toppled-over containers out of the buffer means.

6. The buffer means according to claim **1**, wherein the buffer means has a front module, an end module and at least one intermediate module.

7. The buffer means according to claim **1**, wherein a length of the buffer means is formed by at least one individual intermediate module of constant module length.

8. The buffer means according to claim **2**, wherein one transfer means is provided between two parallel buffer modules arranged and one after the other, having an endless chain with an upper redirection and a lower redirection at the front module, which are arranged in such a way in the buffer means that the endless chain forms the outlet conveyor track of the initial buffer module and the infeed conveyor track of a following buffer module.

9. The buffer means according to claim **1**, wherein the buffer means is formed by three buffer modules.

10. The buffer means according to claim **9**, wherein one transfer means is arranged between two parallel buffer modules, wherein the transfer means has an endless chain with an upper redirection and a lower redirection provided at a front module, which is arranged in such a way in the buffer means that the endless chain forms the outlet conveyor track of an initial buffer module and the infeed conveyor track of at least one subsequent intermediate buffer module and that the outlet conveyor track of at least one subsequent intermediate buffer module forms the infeed conveyor track of a last buffer module.

11. The buffer means according to claim **2**, wherein a sliding device is provided within the plane formed by the at least two buffer modules, onto which there is mounted a louver band, and on which the at least one transfer device is located.

12. The buffer means according to claim **11**, wherein the louver band is respectively provided between the infeed conveyor track and the outlet conveyor track of a buffer module.

13. The buffer means according to claim 12, wherein the louver band is arranged centrally in the individual buffer modules.

14. The buffer means according to claim 13, wherein the louver band exhibits a lateral guide for the neighboring conveyor tracks.

15. A method for buffering containers according to the first in-first out principle, comprising the steps:

supplying containers from a first container handling unit to an infeed conveyor track of a buffer means;

transferring the containers by means of a transfer device, which exhibits an inner guide and/or an outer guide, from the infeed conveyor track to an outlet conveyor track of the buffer means, wherein during transfer from the infeed conveyor track to the outlet conveyor track the containers are conducted via at least one further drivable transfer conveyor, which is arranged parallel to and between the infeed conveyor track and the outlet conveyor track essentially along an entire length of the buffer module;

determining a required buffer capacity by means of a control unit of the container handling apparatus;

moving a sliding device together with the transfer device in parallel along the infeed conveyor track and the outlet conveyor track, respectively, in dependence on the required buffer capacity; and,

driving the at least one further drivable transfer conveyor in a first transport direction or a second transport direction by a drive mechanism, wherein each drivable transfer conveyor and the sliding device has its own drive mechanism so that the drivable transfer conveyors and the sliding device are individually controllable.

16. A buffer means for containers operating according to the first in-first out principle, comprising:

at least one infeed conveyor track drivable along an infeed direction;

at least one outlet conveyor track drivable along an outlet direction;

three buffer modules, which are arranged parallel to each other; wherein each buffer module is formed by the at least one infeed conveyor track and the at least one outlet conveyor track which are arranged parallel to each other and having a width;

a first edge, at the infeed conveyor track of the buffer module for the containers;

a second edge, at the outlet conveyor track for the containers;

a transfer device with an outer guide, so that the containers are transferrable from the infeed conveyor track to the outlet conveyor track of the buffer module;

a sliding device for sliding the transfer device in parallel along the infeed conveyor track or the outlet conveyor track, respectively, in dependence on a required buffer capacity in the buffer means;

at least one further drivable transfer conveyor arranged between the infeed conveyor track and the outlet conveyor track of the buffer module in such a way that it is parallel to the buffer module;

a transfer means is arranged between an initial buffer module and a subsequent intermediate buffer module, a transfer between the intermediate buffer module and a last buffer module, wherein the initial buffer module, the intermediate buffer module and the last buffer module are arranged parallel to each other and the transfer means has an endless chain with an upper redirection and a lower redirection provided at a front module, which is arranged in such a way in the buffer means that the endless chain forms the outlet conveyor track of the initial buffer module and the infeed conveyor track of the intermediate buffer module and that the outlet conveyor track of the intermediate buffer module forms the infeed conveyor track of the last buffer module; and,

a drive mechanism for the at least one further drivable transfer conveyor for a first transport direction or a second transport direction, wherein each drivable transfer conveyor and the sliding device has its own drive mechanism so that an individually controllable driving of the drivable transfer conveyors and of the sliding device is assured.

17. The buffer means according to claim 16, wherein a sliding device is provided within a plane formed by the initial buffer module, the intermediate buffer module and the last buffer module and on the sliding device is mounted a louver band, and on which the at least one transfer device is located.

18. The buffer means according to claim 17, wherein the louver band is provided between the infeed conveyor track and the outlet conveyor track of each buffer module.

19. The buffer means according to claim 18, wherein the louver band is arranged centrally in the individual buffer modules.

20. The buffer means according to claim 19, wherein the louver band exhibits a lateral guide for the neighboring conveyor tracks.

21. A buffer means for containers operating according to the first in-first out principle, comprising:

at least one infeed conveyor track drivable along an infeed direction;

at least one outlet conveyor track drivable along an outlet direction;

a buffer module, having a front module, intermediate module or an end module, is formed by the at least one infeed conveyor track and the at least one outlet conveyor track which are arranged parallel to each other and having a width, wherein a plurality of front modules and end modules are arranged parallel to each other;

at least one intermediate module is arranged between the front module and the end module;

a sliding device for sliding a transfer device in parallel along the infeed conveyor track or the outlet conveyor track, respectively, in dependence on a required buffer capacity in the buffer means;

at least one further drivable transfer conveyor arranged between the infeed conveyor track and the outlet conveyor track of the buffer module;

a drive mechanism for the at least one further drivable transfer conveyor for a first transport direction or a second transport direction; and,

a drive mechanism for the sliding device;

wherein each drivable transfer conveyor and the sliding device has its own drive mechanism so that the drivable transfer conveyors and the sliding device are individually controllable.

22. The buffer means according to claim 21, wherein the transfer device with an outer guide is provided, so that the containers are transferrable from the infeed conveyor track to the outlet conveyor track of the respective buffer module.

23. The buffer means according to claim 21, wherein at least one further drivable transfer conveyor is arranged between the infeed conveyor track and the outlet conveyor track of the buffer modules in such a way that it is parallel to the buffer module.

24. The buffer means according to claim 21, wherein the front module, the intermediate module and the end module has three buffer modules arranged parallel and at a distance to each other.

25. A buffer means for containers operating according to the first in-first out principle, comprising:

at least one infeed conveyor track drivable along an infeed direction;

at least one outlet conveyor track drivable along an outlet direction;

a buffer module formed by the at least one infeed conveyor track and the at least one outlet conveyor track which are arranged parallel to each other and having a width, wherein the buffer means has at least a front module and an end module;

at least one intermediate module is arranged in a transport direction between the front module and the end module;

a sliding device for sliding a transfer device in parallel along the infeed conveyor track or the outlet conveyor track, respectively, in dependence on a required buffer capacity in the buffer means;

at least one further drivable transfer conveyor arranged between the infeed conveyor track and the outlet conveyor track of the buffer module;

a drive mechanism for the at least one further drivable transfer conveyor for a first transport direction or a second transport direction; and,

a drive mechanism for the sliding device;

wherein each drivable transfer conveyor and the sliding device has its own drive mechanism so that the drivable transfer conveyors and the sliding device are individually controllable.

26. The buffer means according to claim 25, wherein the transfer device is provided with an outer guide, so that the containers are transferrable from the infeed conveyor track to the outlet conveyor track of the buffer module.

27. The buffer means according to claim 25, wherein a plurality of buffer modules are arranged parallel to each other, each having a front module and an end module and at least one intermediate module arranged in the transport direction between the front module and the end module of each buffer module.

28. The buffer means according to claim 25, wherein three buffer modules are arranged parallel to each other and at least two intermediate buffer modules are arranged in the transport direction between the front module and the end module of each buffer module.

29. The buffer means according to claim 25, wherein the at least one further drivable transfer conveyor is arranged between the infeed conveyor track and the outlet conveyor track of the buffer module in such a way that it is parallel to the buffer module.

30. A buffer means for containers operating according to the first in-first out principle, comprising:

at least one infeed conveyor track drivable along an infeed direction;

at least one outlet conveyor track drivable along an outlet direction;

a buffer module formed by the at least one infeed conveyor track and the at least one outlet conveyor track which are arranged parallel to each other and having a width;

a transfer device with an inner guide and an outer guide, so that the containers are transferrable from the infeed conveyor track to the outlet conveyor track of the buffer module, wherein a position of the outer guide of each transfer device is adjustable so that a width of a track is changed;

a sliding device for sliding the transfer device parallel along the infeed conveyor track or the outlet conveyor track, respectively, in dependence on a required buffer capacity in the buffer means;

at least one further drivable transfer conveyor arranged between the infeed conveyor track and the outlet conveyor track of the buffer module;

a drive mechanism for the at least one further drivable transfer conveyor for a first transport direction or a second transport direction; and,

a drive mechanism for the sliding device;

wherein each drivable transfer conveyor and the sliding device has its own drive mechanism so that the drivable transfer conveyors and the sliding device are individually controllable.

31. The buffer means according to claim 30, wherein the inner guide and the outer guide hang from a plurality of arms and the arms carry adjusting elements through which the width of the track or the position of the outer guide, respectively, are changed.

32. A buffer means for containers operating according to the first in-first out principle, comprising:

at least one infeed conveyor track drivable along an infeed direction;

at least one outlet conveyor track drivable along an outlet direction;

two buffer modules formed by the at least one infeed conveyor track and the at least one outlet conveyor track which are arranged parallel and at a distance to each other, wherein the two buffer modules are arranged parallel to each other;

a discharge conveyor track for toppled over containers is arranged between the two buffer modules, wherein the toppled over containers are transported to an end of the buffer means, wherein the discharge conveyor track provides for a lateral guidance of the neighboring transfer conveyors;

a transfer device with an outer guide, so that the containers are transferrable from the infeed conveyor track to the outlet conveyor track of the buffer module;

a sliding device for sliding the transfer device parallel along the infeed conveyor track or the outlet conveyor track, respectively, in dependence on a required buffer capacity in the buffer means;

at least one further drivable transfer conveyor arranged between the infeed conveyor track and the outlet conveyor track of the buffer module;

a drive mechanism for the at least one further drivable transfer conveyor for a first transport direction or a second transport direction; and,

a drive mechanism for the sliding device;

wherein each drivable transfer conveyor and the sliding device has its own drive mechanism so that the drivable transfer conveyors and the sliding device are individually controllable.

33. A buffer means for containers operating according to the first in-first out principle, comprising:

at least one infeed conveyor track drivable along an infeed direction;

at least one outlet conveyor track drivable along an outlet direction;

a buffer module formed by the at least one infeed conveyor track and the at least one outlet conveyor track which are arranged parallel and wherein the infeed conveyor track, the outlet conveyor track and a cover or a discharge conveyor track of the buffer module are arranged so that a closed surface or plane, respectively, is formed;

a transfer device with an inner guide and an outer guide, so that the containers are transferrable from the infeed conveyor track to the outlet conveyor track of the buffer module;

a sliding device for sliding the transfer device parallel along the infeed conveyor track or the outlet conveyor track, respectively, in dependence on a required buffer capacity in the buffer means;

at least one further drivable transfer conveyor arranged between the infeed conveyor track and the outlet conveyor track of the buffer module;

a drive mechanism for the at least one further drivable transfer conveyor for a first transport direction or a second transport direction; and,

a drive mechanism for the sliding device;

wherein each drivable transfer conveyor and the sliding device has its own drive mechanism so that the drivable transfer conveyors and the sliding device are individually controllable.

34. The buffer means according to claim **33**, wherein a plurality of buffer modules are arranged parallel to each other each having an infeed conveyor track and an outlet conveyor track, wherein the cover or the discharge conveyor tracks are arranged between the infeed conveyor track and the outlet conveyor track so that all conveyor tracks and the cover form a closed surface or plane across the entire buffer means.

35. A buffer means for containers operating according to the first in-first out principle, comprising:

at least one infeed conveyor track drivable along an infeed direction;

at least one outlet conveyor track drivable along an outlet direction;

an endless transfer chain arranged between the infeed conveyor track and the outlet conveyor track;

a louver band arranged between the endless transfer chain, wherein a sliding device is connected to the louver band on either side; and,

at least one support rail, wherein the louver band and the endless transfer chain are guided and supported by one support rail.

36. A buffer means for containers operating according to the first in-first out principle, comprising:

at least one infeed conveyor track drivable along an infeed direction;

aleast one outlet conveyor track drivable along an outlet direction;

an endless transfer chain arranged between the infeed conveyor track and the outlet conveyor track;

a sliding device mounted to a louver band which is arranged between the endless transfer chain; and,

deflection pulleys are provided in the vicinity of the sliding device for guiding the transfer chain on an inner side by engaging at least TAB-guidances of the endless transfer chain, for securing the endless transfer chain against a lateral rising in horizontal deflections.

37. The buffer means according to claim **36**, wherein the endless transfer chain exhibits a TAB-guidance on the side facing support rails wherein the TAB-guidance is guided by the support rail shared by the outlet conveyor track, the endless transfer chain, and the infeed conveyor track with the endless transfer chain.

* * * * *